JVC

SERVICE MANUAL

DVD RECEIVER WITH MONITOR

KW-ADV792J, KW-AVX624UI, KW-AVX625U, KW-AVX625UT, KW-AVX625EU, KW-AVX626U, KW-AVX626UT, KW-AVX626EU, KW-AVX626A, KW-AVX720J, KW-AVX720E, KW-AVX720EE, KW-AVX724UI, KW-AVX725U, KW-AVX725UN, KW-AVX725UT, KW-AVX725EU, KW-AVX726U, KW-AVX726UN, KW-AVX726UT, KW-AVX726EU, KW-AVX726A, KW-AVX728UF

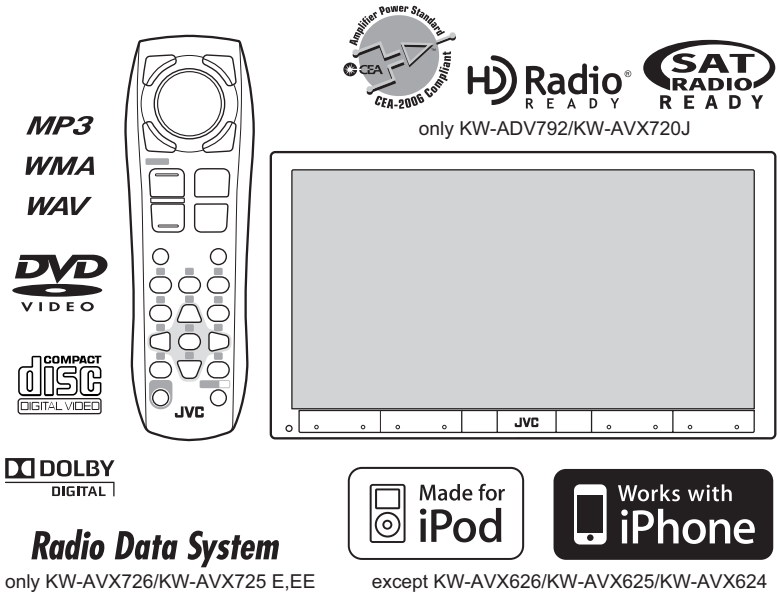

Lead free solder used in the board (material : Sn-Ag-Cu, melting point : 219 Centigrade)
Lead free solder used in the board (material : Sn-Cu, melting point : 230 Centigrade)

TABLE OF CONTENTS

1 PRECAUTION 1-7
2 SPECIFIC SERVICE INSTRUCTIONS 1-10
3 DISASSEMBLY 1-10
4 ADJUSTMENT 1-19
5 TROUBLESHOOTING 1-32

COPYRIGHT © 2009 Victor Company of Japan, Limited

No.MA443<Rev.001>
2009/4

SPECIFICATION

KW-ADV792/KW-AVX720J

AMPLIFIER			
Power Output			20 W RMS × 4 Channels at 4 Ω and < or = 1% THD+N
Signal-to-Noise Ratio			80 dBA (reference: 1 W into 4 Ω)
Load Impedance			4 Ω (4 Ω to 8 Ω allowance)
Equalizer Control Range	Frequencies		60 Hz, 150 Hz, 400 Hz, 1 kHz, 2.5 kHz, 6.3 kHz, 15 kHz
	Level		±10 dB
Audio Output Level LINE OUT (REAR) and SUBWOOFER	Line-Out Level/Impedance		2.5 V/20 kΩ load (full scale)
	Output Impedance		1 kΩ
Color System			NTSC
Video Output (composite)			1 Vp-p/75 Ω
Other Terminals	Input		LINE IN, VIDEO IN, Antenna input, USB input, Steering wheel remote input
	Output		VIDEO OUT
	Others		CD changer, DIGITAL OUT (optical)
TUNER SECTION			
Frequency Range	FM	with channel interval set to 100 kHz or 200 kHz	87.5 MHz to 107.9 MHz
		with channel interval set to 50 kHz	87.5 MHz to 108.0 MHz
	AM	with channel interval set to 10 kHz	530 kHz to 1 710 kHz
		with channel interval set to 9 kHz	531 kHz to 1 602 kHz
FM Tuner	Usable Sensitivity		9.3 dBf (0.8 μV/75 Ω)
	50 dB Quieting Sensitivity		16.3 dBf (1.8 μV/75 Ω)
	Alternate Channel Selectivity (400 kHz)		65 dB
	Frequency Response		40 Hz to 15 000 Hz
	Stereo Separation		40 dB
AM Tuner	Sensitivity		20 μV
	Selectivity		40 dB
DVD/CD			
Signal Detection System			Non-contact optical pickup (semiconductor laser)
Frequency Response	DVD, fs=48 kHz/96 kHz		16 Hz to 22 000 Hz
	VCD/CD		16 Hz to 20 000 Hz
Dynamic Range			96 dB
Signal-to-Noise Ratio			98 dB
Wow and Flutter			Less than measurable limit
USB			
USB Standards			USB 2.0 Full Speed
Data Transfer Rate	Full Speed		Maximum 12 Mbps
	Low Speed		Maximum 1.5 Mbps
Compatible Device			Mass storage class
Compatible File System			FAT 32/16/12
Max. Current			DC 5 V 500 mA
MONITOR			
Screen Size			7 inch wide liquid crystal display
Number of Pixel			336 960 pixels: 480 × 3 (horizontal) × 234 (vertical)
Drive Method			TFT (Thin Film Transistor) active matrix format
Color System			NTSC/PAL
Aspect Ratio			16:9 (wide)
GENERAL			
Power Requirement	Operating Voltage		DC 14.4 V (11 V to 16 V allowance)
Grounding System			Negative ground
Allowable Storage Temperature			-10°C to +60°C (14°F to 140°F)
Allowable Operating Temperature			0°C to +40°C (32°F to 104°F)
Dimensions (W × H × D) With trim plate and sleeve attached	Installation Size (approx.)		182 mm × 111 mm × 161 mm
			(7-3/16” × 4-3/8” × 6-3/8”)
	Panel Size (approx.)		188 mm × 117 mm × 22 mm
			(7-7/16” × 4-5/8” × 7/8”)
Mass (approx.)			3.3 kg (7.3 lbs) (including trim plate and sleeve)

Design and specifications are subject to change without notice.

KW-AVX720E

AMPLIFIER		
Maximum Power Output	Front/Rear	50 W per channel
Continuous Power Output (RMS)	Front/Rear	20 W per channel into 4 Ω, 40 Hz to 20 000 Hz at no more than 1.0% total harmonic distortion
Load Impedance		4 Ω (4 Ω to 8 Ω allowance)
Equalizer Control Range	Frequencies	60 Hz, 150 Hz, 400 Hz, 1 kHz, 2.5 kHz, 6.3 kHz, 15 kHz
	Level	±10 dB
Signal-to-Noise Ratio		70 dB
Audio Output Level	Line-Out Level/Impedance	2.5 V/20 kΩ load (full scale)
LINE OUT (REAR) and SUBWOOFER	Output Impedance	1 kΩ
Color System		PAL
Video Output (composite)		1 Vp-p/75 Ω
Other Terminals	Input	LINE IN, VIDEO IN, Aerial input, USB input, Steering wheel remote input
	Output	VIDEO OUT
	Others	CD changer, DIGITAL OUT (optical)
FM/AM TUNER		
Frequency Range	FM	87.5 MHz to 108.0 MHz
	AM	(MW) 522 kHz to 1 620 kHz
		(LW) 144 kHz to 279 kHz
FM Tuner	Usable Sensitivity	9.3 dBf (0.8 μV/75 Ω)
	50 dB Quieting Sensitivity	16.3 dBf (1.8 μV/75 Ω)
	Alternate Channel Selectivity (400 kHz)	65 dB
	Frequency Response	40 Hz to 15 000 Hz
	Stereo Separation	40 dB
MW Tuner	Sensitivity/Selectivity	20 μV/40 dB
LW Tuner	Sensitivity	50 μV
DVD/CD		
Signal Detection System		Non-contact optical pickup (semiconductor laser)
Frequency Response	DVD, fs=48 kHz/96 kHz	16 Hz to 22 000 Hz
	VCD/CD	16 Hz to 20 000 Hz
Dynamic Range		96 dB
Signal-to-Noise Ratio		98 dB
Wow and Flutter		Less than measurable limit
USB		
USB Standards		USB 2.0 Full Speed
Data Transfer Rate	Full Speed	Maximum 12 Mbps
	Low Speed	Maximum 1.5 Mbps
Compatible Device		Mass storage class
Compatible File System		FAT 32/16/12
Max. Current		DC 5 V 500 mA
MONITOR		
Screen Size		7 inch wide liquid crystal display
Number of Pixel		336 960 pixels: 480 × 3 (horizontal) × 234 (vertical)
Drive Method		TFT (Thin Film Transistor) active matrix format
Color System		NTSC/PAL
Aspect Ratio		16:9 (wide)
GENERAL		
Power Requirement	Operating Voltage	DC 14.4 V (11 V to 16 V allowance)
Grounding System		Negative ground
Allowable Storage Temperature		-10°C to +60°C
Allowable Operating Temperature		0°C to +40°C
Dimensions (W × H × D)	Installation Size (approx.)	182 mm × 111 mm × 161 mm
With trim plate and sleeve attached	Panel Size (approx.)	188 mm × 117 mm × 22 mm
Mass (approx.)		3.3 kg (including trim plate and sleeve)

Design and specifications are subject to change without notice.

KW-AVX720EE

AMPLIFIER		
Maximum Power Output	Front/Rear	50 W per channel
Continuous Power Output (RMS)	Front/Rear	20 W per channel into 4 Ω, 40 Hz to 20 000 Hz at no more than 1.0% total harmonic distortion
Load Impedance		4 Ω (4 Ω to 8 Ω allowance)
Equalizer Control Range	Frequencies	60 Hz, 150 Hz, 400 Hz, 1 kHz, 2.5 kHz, 6.3 kHz, 15 kHz
	Level	±10 dB
Signal-to-Noise Ratio		70 dB
Audio Output Level	Line-Out Level/Impedance	2.5 V/20 kΩ load (full scale)
LINE OUT (REAR) and SUBWOOFER	Output Impedance	1 kΩ
Color System		PAL
Video Output (composite)		1 Vp-p/75 Ω
Other Terminals	Input	LINE IN, VIDEO IN, Aerial input, USB input, Steering wheel remote input
	Output	VIDEO OUT
	Others	CD changer, DIGITAL OUT (optical)
FM/AM TUNER		
Frequency Range	FM1/FM2	87.5 MHz to 108.0 MHz
	FM3	65.0 MHz to 74.0 MHz
	AM	(MW) 522 kHz to 1 620 kHz
		(LW) 144 kHz to 279 kHz
FM Tuner	Usable Sensitivity	9.3 dBf (0.8 μV/75 Ω)
	50 dB Quieting Sensitivity	16.3 dBf (1.8 μV/75 Ω)
	Alternate Channel Selectivity (400 kHz)	65 dB
	Frequency Response	40 Hz to 15 000 Hz
	Stereo Separation	40 dB
MW Tuner	Sensitivity/Selectivity	20 μV/40 dB
LW Tuner	Sensitivity	50 μV
DVD/CD		
Signal Detection System		Non-contact optical pickup (semiconductor laser)
Frequency Response	DVD, fs=48 kHz/96 kHz	16 Hz to 22 000 Hz
	VCD/CD	16 Hz to 20 000 Hz
Dynamic Range		96 dB
Signal-to-Noise Ratio		98 dB
Wow and Flutter		Less than measurable limit
USB		
USB Standards		USB 2.0 Full Speed
Data Transfer Rat	Full Speed	Maximum 12 Mbps
	Low Speed	Maximum 1.5 Mbps
Compatible Device		Mass storage class
Compatible File System		FAT 32/16/12
Max. Current		DC 5 V 500 mA
MONITOR		
Screen Size		7 inch wide liquid crystal display
Number of Pixel		336 960 pixels: 480 × 3 (horizontal) × 234 (vertical)
Drive Method		TFT (Thin Film Transistor) active matrix format
Color System		NTSC/PAL
Aspect Ratio		16:9 (wide)
GENERAL		
Power Requirement	Operating Voltage	DC 14.4 V (11 V to 16 V allowance)
Grounding System		Negative ground
Allowable Storage Temperature		-10°C to +60°C
Allowable Operating Temperature		0°C to +40°C
Dimensions (W × H × D)	Installation Size (approx.)	182 mm × 111 mm × 161 mm
With trim plate and sleeve attached	Panel Size (approx.)	188 mm × 117 mm × 22 mm
Mass (approx.)		3.3 kg (including trim plate and sleeve)

Design and specifications are subject to change without notice.

KW-AVX726/KW-AVX725/KW-AVX626/KW-AVX625EU

AMPLIFIER			
Maximum Power Output		Front/Rear	50 W per channel
Continuous Power Output (RMS)		Front/Rear	20 W per channel into 4 Ω, 40 Hz to 20 000 Hz at no more than 1.0% total harmonic distortion
Load Impedance			4 Ω (4 Ω to 8 Ω allowance)
Equalizer Control Range		Frequencies	60 Hz, 150 Hz, 400 Hz, 1 kHz, 2.5 kHz, 6.3 kHz, 15 kHz
		Level	±10 dB
Signal-to-Noise Ratio			70 dB
Audio Output LevelLINE OUT (REAR) and SUBWOOFER (for KW-AVX726/KW-AVX725)		Line-Out Level/Impedance	2.5 V/20 kΩ load (full scale)
		Output Impedance	1 kΩ
Color System		KW-AVX726/KW-AVX725	NTSC/PAL
		KW-AVX626/KW-AVX625	PAL
Video Output (composite)			1 Vp-p/75 Ω
Other Terminals		Input	LINE IN, VIDEO IN, Aerial input
			USB input (for KW-AVX726/KW-AVX725)
		Output	VIDEO OUT
		Others	CD changer, DIGITAL OUT (optical), POSITION OUT
FM/AM TUNER			
Frequency Range	FM		87.5 MHz to 108.0 MHz
	AM	KW-AVX726/KW-AVX725	(MW) 522 kHz to 1 620 kHz
			(LW) 144 kHz to 279 kHz
		KW-AVX626/KW-AVX625	531 kHz to 1 602 kHz
FM Tuner	Usable Sensitivity		9.3 dBf (0.8 μV/75 Ω)
	50 dB Quieting Sensitivity		16.3 dBf (1.8 μV/75 Ω)
	Alternate Channel Selectivity (400 kHz)		65 dB
	Frequency Response		40 Hz to 15 000 Hz
	Stereo Separation		40 dB
AM/MW Tuner	Sensitivity/Selectivity		20 μV/40 dB
LW Tuner	Sensitivity		50 μV
DVD/CD			
Signal Detection System			Non-contact optical pickup (semiconductor laser)
Frequency Response		DVD, fs=48 kHz/96 kHz	16 Hz to 22 000 Hz
		VCD/CD	16 Hz to 20 000 Hz
Dynamic Range			96 dB
Signal-to-Noise Ratio			98 dB
Wow and Flutter			Less than measurable limit
USB (for KW-AVX726/KW AVX725)			
USB Standards			USB 2.0 Full Speed
Data Transfer Rat		Full Speed	Maximum 12 Mbps
		Low Speed	Maximum 1.5 Mbps
Compatible Device			Mass storage class
Compatible File System			FAT 32/16/12
Max. Current			DC 5 V 500 mA
MONITOR			
Screen Size			7 inch wide liquid crystal display
Number of Pixel			336 960 pixels: 480 × 3 (horizontal) × 234 (vertical)
Drive Method			TFT (Thin Film Transistor) active matrix format
Color System			NTSC/PAL
Aspect Ratio			16:9 (wide)
GENERAL			
Power Requirement		Operating Voltage	DC 14.4 V (11 V to 16 V allowance)
Grounding System			Negative ground
Allowable Storage Temperature			-10°C to +60°C
Allowable Operating Temperature			0°C to +40°C
Dimensions (W × H × D)		Installation Size (approx.)	182 mm × 111 mm × 161 mm
With trim plate and sleeve attached		Panel Size (approx.)	188 mm × 117 mm × 22 mm
Mass (approx.)			3.3 kg (including trim plate and sleeve)

Design and specifications are subject to change without notice.

KW-AVX726/KW-AVX725/KW-AVX724/KW-AVX626/KW-AVX625/KW-AVX624 U/UN/UT/A/UI

AMPLIFIER		
Maximum Power Output	Front/Rear	50 W per channel
Continuous Power Output (RMS)	Front/Rear	20 W per channel into 4 Ω, 40 Hz to 20 000 Hz at no more than 1.0% total harmonic distortion
Load Impedance		4 Ω (4 Ω to 8 Ω allowance)
Equalizer Control Range	Frequencies	60 Hz, 150 Hz, 400 Hz, 1 kHz, 2.5 kHz, 6.3 kHz, 15 kHz
	Level	±10 dB
Signal-to-Noise Ratio		70 dB
Audio Output Level LINE OUT (REAR) and SUBWOOFER (for KW-AVX726/KW-AVX725/KW-AVX724)	Line-Out Level/Impedance	2.5 V/20 kΩ load (full scale)
	Output Impedance	1 kΩ
Color System		NTSC/PAL
Video Output (composite)		1 Vp-p/75 Ω
Other Terminals	Input	LINE IN, VIDEO IN, Antenna input
		USB input (for KW-AVX726/KW-AVX725/KW-AVX724)
	Output	VIDEO OUT
	Others	CD changer, DIGITAL OUT (optical), POSITION OUT
FM/AM TUNER		
Frequency Range	FM	87.5 MHz to 108.0 MHz
	AM	531 kHz to 1 602 kHz
FM Tuner	Usable Sensitivity	9.3 dBf (0.8 μV/75 Ω)
	50 dB Quieting Sensitivity	16.3 dBf (1.8 μV/75 Ω)
	Alternate Channel Selectivity (400 kHz)	65 dB
	Frequency Response	40 Hz to 15 000 Hz
	Stereo Separation	40 dB
AM Tuner	Sensitivity/Selectivity	20 μV/40 dB
DVD/CD		
Signal Detection System		Non-contact optical pickup (semiconductor laser)
Frequency Response	DVD, fs=48 kHz/96 kHz	16 Hz to 22 000 Hz
	VCD/CD	16 Hz to 22 000 Hz
Dynamic Range		96 dB
Signal-to-Noise Ratio		98 dB
Wow and Flutter		Less than measurable limit
USB (for KW-AVX726/KW-AVX725/KW-AVX724)		
USB Standards		USB 2.0 Full Speed
Data Transfer Rate	Full Speed	Maximum 12 Mbps
	Low Speed	Maximum 1.5 Mbps
Compatible Device		Mass storage class
Compatible File System		FAT 32/16/12
Max. Current		DC 5 V 500 mA
MONITOR		
Screen Size		7 inch wide liquid crystal display
Number of Pixel		336 960 pixels: 480 × 3 (horizontal) × 234 (vertical)
Drive Method		TFT (Thin Film Transistor) active matrix format
Color System		NTSC/PAL
Aspect Ratio		16:9 (wide)
GENERAL		
Power Requirement	Operating Voltage	DC 14.4 V (11 V to 16 V allowance)
Grounding System		Negative ground
Allowable Storage Temperature		-10°C to +60°C
Allowable Operating Temperature		0°C to +40°C
Dimensions (W × H × D)	Installation Size (approx.)	178 mm × 100 mm × 160 mm
	Panel Size (approx.)	184 mm × 112 mm × 23 mm
Mass (approx.)		2.7 kg

Design and specifications are subject to change without notice.

SECTION 1
PRECAUTION

1.1 Safety Precautions

(1) This design of this product contains special hardware and many circuits and components specially for safety purposes. For continued protection, no changes should be made to the original design unless authorized in writing by the manufacturer. Replacement parts must be identical to those used in the original circuits. Services should be performed by qualified personnel only.

(2) Alterations of the design or circuitry of the product should not be made. Any design alterations of the product should not be made. Any design alterations or additions will void the manufacturers warranty and will further relieve the manufacture of responsibility for personal injury or property damage resulting therefrom.

(3) Many electrical and mechanical parts in the products have special safety-related characteristics. These characteristics are often not evident from visual inspection nor can the protection afforded by them necessarily be obtained by using replacement components rated for higher voltage, wattage, etc. Replacement parts which have these special safety characteristics are identified in the Parts List of Service Manual. Electrical components having such features are identified by shading on the schematics and by (⚠) on the Parts List in the Service Manual. The use of a substitute replacement which does not have the same safety characteristics as the recommended replacement parts shown in the Parts List of Service Manual may create shock, fire, or other hazards.

(4) The leads in the products are routed and dressed with ties, clamps, tubings, barriers and the like to be separated from live parts, high temperature parts, moving parts and/or sharp edges for the prevention of electric shock and fire hazard. When service is required, the original lead routing and dress should be observed, and it should be confirmed that they have been returned to normal, after reassembling.

(5) Leakage shock hazard testing
After reassembling the product, always perform an isolation check on the exposed metal parts of the product (antenna terminals, knobs, metal cabinet, screw heads, headphone jack, control shafts, etc.) to be sure the product is safe to operate without danger of electrical shock.Do not use a line isolation transformer during this check.

- Plug the AC line cord directly into the AC outlet. Using a "Leakage Current Tester", measure the leakage current from each exposed metal parts of the cabinet, particularly any exposed metal part having a return path to the chassis, to a known good earth ground. Any leakage current must not exceed 0.5mA AC (r.m.s.).
- Alternate check method
  Plug the AC line cord directly into the AC outlet. Use an AC voltmeter having, 1,000Ω per volt or more sensitivity in the following manner. Connect a 1,500Ω 10W resistor paralleled by a 0.15μF AC-type capacitor between an exposed metal part and a known good earth ground.
  Measure the AC voltage across the resistor with the AC voltmeter.
  Move the resistor connection to each exposed metal part, particularly any exposed metal part having a return path to the chassis, and measure the AC voltage across the resistor. Now, reverse the plug in the AC outlet and repeat each measurement. Voltage measured any must not exceed 0.75 V AC (r.m.s.). This corresponds to 0.5 mA AC (r.m.s.).

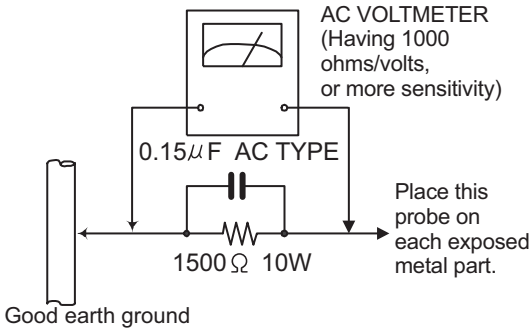

1.2 Warning

(1) This equipment has been designed and manufactured to meet international safety standards.
(2) It is the legal responsibility of the repairer to ensure that these safety standards are maintained.
(3) Repairs must be made in accordance with the relevant safety standards.
(4) It is essential that safety critical components are replaced by approved parts.
(5) If mains voltage selector is provided, check setting for local voltage.

1.3 Caution

Burrs formed during molding may be left over on some parts of the chassis.
Therefore, pay attention to such burrs in the case of preforming repair of this system.

1.4 Critical parts for safety

In regard with component parts appearing on the silk-screen printed side (parts side) of the PWB diagrams, the parts that are printed over with black such as the resistor (▬), diode (▮) and ICP (●) or identified by the " ⚠ " mark nearby are critical for safety. When replacing them, be sure to use the parts of the same type and rating as specified by the manufacturer.
(This regulation dose not Except the J and C version)

1.5 Preventing static electricity

Electrostatic discharge (ESD), which occurs when static electricity stored in the body, fabric, etc. is discharged, can destroy the laser diode in the traverse unit (optical pickup). Take care to prevent this when performing repairs.

1.5.1 Grounding to prevent damage by static electricity

Static electricity in the work area can destroy the optical pickup (laser diode) in devices such as laser products.
Be careful to use proper grounding in the area where repairs are being performed.

(1) Ground the workbench
Ground the workbench by laying conductive material (such as a conductive sheet) or an iron plate over it before placing the traverse unit (optical pickup) on it.

(2) Ground yourself
Use an anti-static wrist strap to release any static electricity built up in your body.

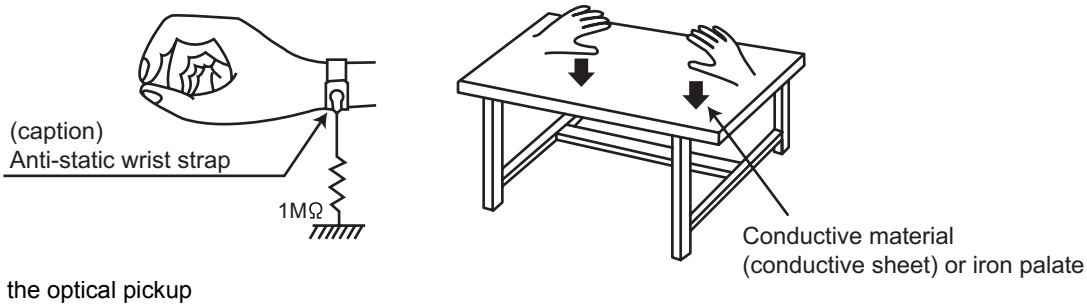

(3) Handling the optical pickup
- In order to maintain quality during transport and before installation, both sides of the laser diode on the replacement optical pickup are shorted. After replacement, return the shorted parts to their original condition.
(Refer to the text.)
- Do not use a tester to check the condition of the laser diode in the optical pickup. The tester's internal power source can easily destroy the laser diode.

1.6 Handling the traverse unit (optical pickup)

(1) Do not subject the traverse unit (optical pickup) to strong shocks, as it is a sensitive, complex unit.
(2) Cut off the shorted part of the flexible cable using nippers, etc. after replacing the optical pickup. For specific details, refer to the replacement procedure in the text. Remove the anti-static pin when replacing the traverse unit. Be careful not to take too long a time when attaching it to the connector.
(3) Handle the flexible cable carefully as it may break when subjected to strong force.
(4) I t is not possible to adjust the semi-fixed resistor that adjusts the laser power. Do not turn it.

1.7 Attention when traverse unit is decomposed

***Please refer to "Disassembly method" in the text for the pickup unit.**

- Apply solder to the short land sections before the card wire is disconnected from the connecto on the servo board. (If the card wire is disconnected without applying solder, the pickup may be destroyed by static electricity.)
- In the assembly, be sure to remove solder from the short land sections after connecting the card wire.

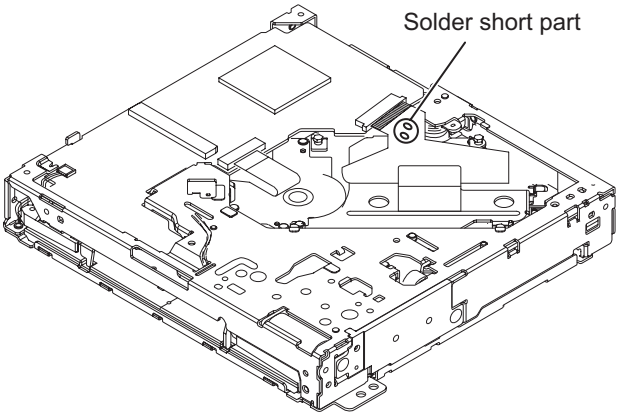

1.8 Important for laser products

1.CLASS 1 LASER PRODUCT

2.CAUTION :
(For U.S.A.) Visible and/or invisible class II laser radiation when open. Do not stare into beam.
(Others) Visible and/or invisible class 1M laser radiation when open. Do not view directly with optical instruments.

3.CAUTION : Visible and/or invisible laser radiation when open and inter lock failed or defeated. Avoid direct exposure to beam.

4.CAUTION : This laser product uses visible and/or invisible laser radiation and is equipped with safety switches which prevent emission of radiation when the drawer is open and the safety interlocks have failed or are defeated. It is dangerous to defeat the safety switches.

5.CAUTION : If safety switches malfunction, the laser is able to function.

6.CAUTION : Use of controls, adjustments or performance of procedures other than those specified here in may result in hazardous radiation exposure.

⚠ ***CAUTION*** **Please use enough caution not to see the beam directly or touch it in case of an adjustment or operation check.**

(For U.S.A.)
CAUTION : Visible and/or invisible class II laser radiation when open. Do not stare into beam.
(Others)
CAUTION : Visible and/or invisible class 1M laser radiation when open. Do not view directly with optical instruments

ACHTUNG: Sichtbare und/oder unsichtbare Laserstrahlung der Klasse 1M bei offenen Abdeckungen. Nicht direkt mit optischen Instrumenten betrachten.

ATTENTION: Rayonnement laser visible et/ou invisible de classe 1M une fois ouvert. Ne pas regarder directement avec des instruments optiques.

VOORZICHTIG: Zichtbare en/of onzichtbare klasse 1M laserstralen indien geopend. Bekijk niet direct met optische instrumenten.

ATTENZIONE: Radiazione laser in classe 1M visibile e/o invisibile quando aperto. Non osservare direttamente con strumenti ottici.

VARNING: Synlig och/eller osynlig laserstrålning, klass 1M, när denna del är öppnad. Betrakta ej strålen med optiska instrument.

VARO!: Avattaessa olet alttiina näkyvälle ja/tai näkymättömälle luokan 1M lasersäteilylle. Älä tarkastele sitä optisen laitteen läpi.

ADVARSEL: Synlig og/eller usynlig klasse 1M-laserstråling ved åbning. Se ikke direkte med optiske instrumenter.

AVISO: Radiación láser de clase 1M visible y/o invisible cuando está abierto. No mirar directamente con instrumental óptico.

PRECAUÇÃO: Radiação laser de classe 1M visível e/ou invisível quando aberto. Não olhe directamente com instrumentos ópticos.

PRECAUÇÃO: Radiação laser de classe 1M visível e/ou invisível quando aberto. Não olhe diretamente com instrumentos óticos.

ПРЕДУПРЕЖДЕНИЕ: В открытом состоянии происходит видимое и/или невидимое излучение лазера класса 1M. Не смотрите непосредственно в оптические инструменты.

UWAGA: Otwarcie spowoduje narażenie na widzialne i/lub niewidzialne promieniowanie lasera klasy 1M. Nie patrzeć bezpośrednio w przyrządy optyczne.

UPOZORNĚNÍ: Při otevření vydává viditelné popř. neviditelné laserové ozáření třídy 1M. Nedívejte se do otvoru přímo s optickými nástroji.

FIGYELMEZTETÉS: Látható és/vagy láthatatlan 1M osztályú sugárzás nyitott állapotban. Ne nézze közvetlenül optikai műszerekkel.

注意：打開蓋板可能會產生可見或不可見的 1M 級鐳射。不要使用光學儀器直接進行窺視。

注意：打开盖板可能会产生可见或不可见的 1M 级镭射。不要使用光学仪器直接进行窥视。

تنبيه: يوجد إشعاع ليزري مرئي و/أو غير مرئي من الفئة 1M عندما يكون الجهاز مفتوحا. تجنب النظر مباشرة داخل الجهاز باستخدام أدوات بصرية.

احتياط: هنگامی که باز گردد، تشعشع مرئی و یا نامرئی کلاس 1M لیزر وجود دارد. با لوازم چشمی مستقیماً به آن نگاه نکنید.

주의: 개방하면 가시 및/또는 비가시 클래스 1M 레이저 방사선이 나옵니다. 광학 기구로 직접 들여다보지 마십시오.

REPRODUCTION AND POSITION OF LABELS and PRINT

WARNING LABEL and PRINT

CAUTION	ATTENTION	AVISO	VARNING	注意	CAUTION
VISIBLE AND/OR INVISIBLE CLASS 1M LASER RADIATION WHEN OPEN. DO NOT VIEW DIRECTLY WITH OPTICAL INSTRUMENTS. IEC60825-1:2001 (ENG)	RAYONNEMENT LASER VISIBLE ET/OU INVISIBLE DE CLASSE 1M UNE FOIS OUVERT. NE PAS REGARDER DIRECTEMENT AVEC DES INSTRUMENTS OPTIQUES. (FRA)	RADIACIÓN LÁSER DE CLASE 1M VISIBLE Y/O INVISIBLE CUANDO ESTÁ ABIERTO. NO MIRAR DIRECTAMENTE CON INSTRUMENTAL ÓPTICO. (ESP)	SYNLIG OCH/ELLER OSYNLIG LASERSTRÅLNING, KLASS 1M, NÄR DENNA DEL ÄR ÖPPNAD. BETRAKTA EJ STRÅLEN MED OPTISKA INSTRUMENT. (SWE)	ここを開くと可視及び/または不可視のクラス1Mレーザー放射が出ます。光学装置で直接見ないでください。 (JPN)	VISIBLE AND/OR INVISIBLE CLASS II LASER RADIATION WHEN OPEN. DO NOT STARE INTO BEAM. FDA 21 CFR (ENG) LV44603-003A

SECTION 2
SPECIFIC SERVICE INSTRUCTIONS

This service manual does not describe SPECIFIC SERVICE INSTRUCTIONS.

SECTION 3
DISASSEMBLY

3.1 Main body (Used figure are KW-AVX720J)

3.1.1 Removing the Front panel (See Fig.1 to 4)

(1) From the bottom side of the main body, insert the screwdriver to hole of the third gear from hole **a** of the bottom chassis, and then turn the gear to clockwise until Front panel comes up. (See Fig.1)

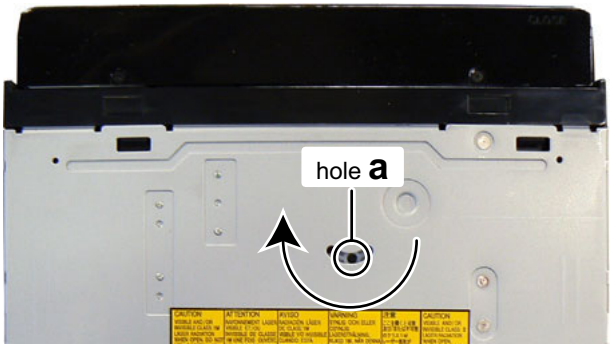

Fig.1

(2) Remove the two screws **A** attaching the both side of the Front panel. (See Fig.2)

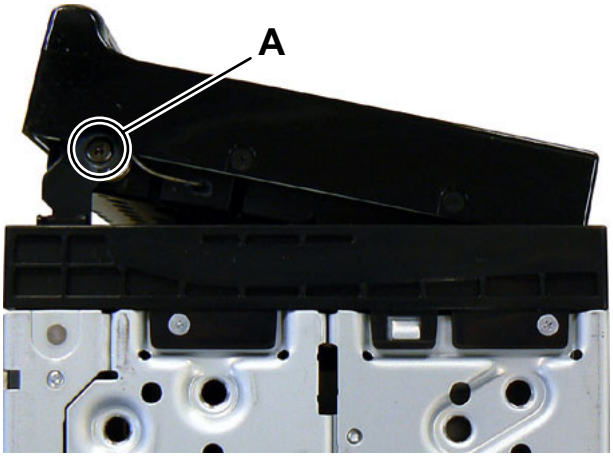

Fig.2

(3) Remove the two screws **B** attaching the FPC cover. (See Fig.3)

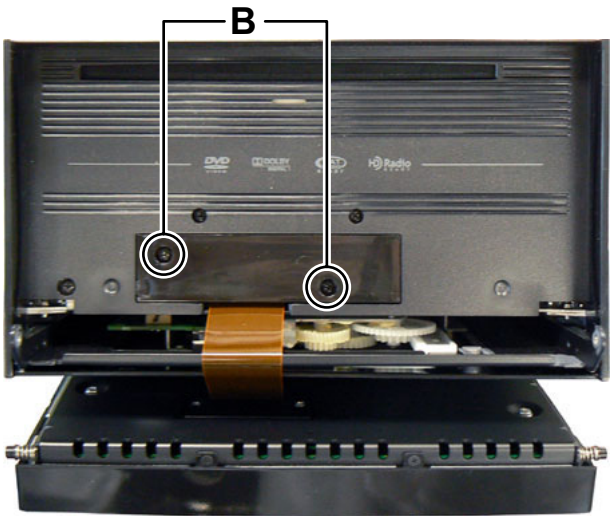

Fig.3

(4) Disconnect the FPC from Front panel connected to connector CN701 of the Main board. (See Fig.4)

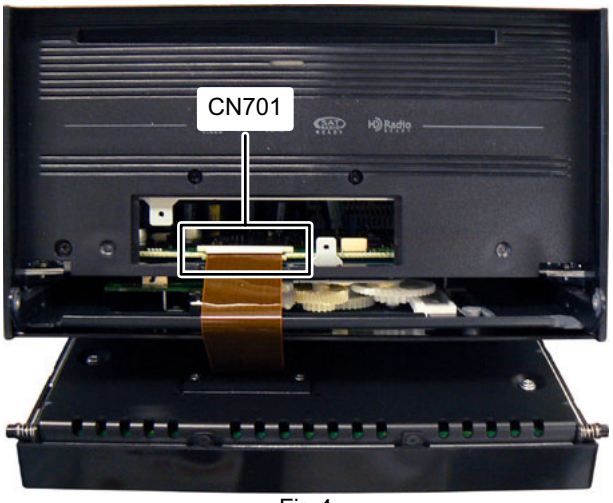

Fig.4

3.1.2 Removing the Heat sink (See Fig.5)

(1) Remove the four screws **C** and two screws **D** attaching the Heat sink.

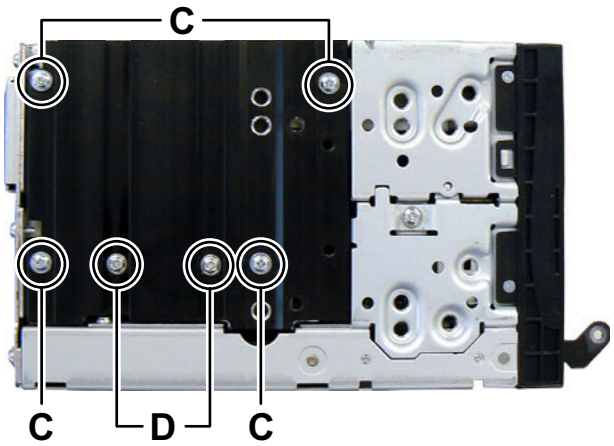

Fig.5

3.1.3 Removing the Rear bracket (A) (See Fig.6, 7)

(1) Remove the three screws **E** attaching the Rear heat sink. (See Fig.6)

(2) Remove the six screws **F**, two screws **G**, one screw **H** and one screw **J** attaching the Rear bracket (B). (See Fig.6)

(3) Remove the one screw **K** attaching the Subwoofer cable. (See Fig.6)

(4) Remove the seven screws **L** attaching the Rear bracket (A). (See Fig.6)

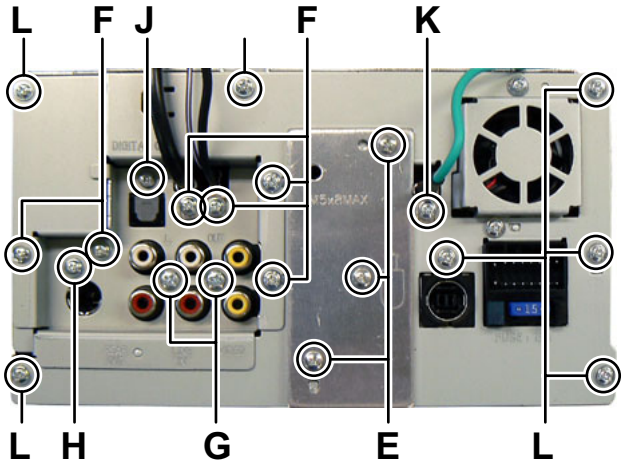

Fig.6

(5) Disconnect the connector wire from FAN connected to connector CN604 of the Sub board. (See Fig.7)

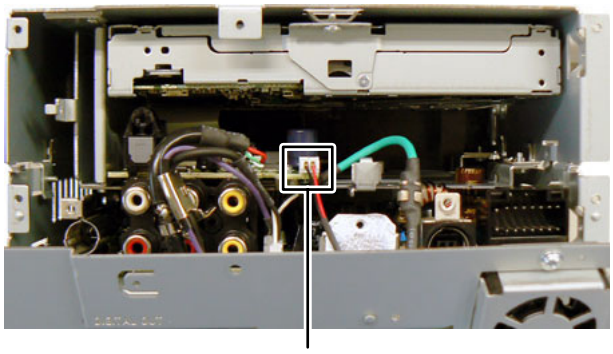

CN604

Fig.7

3.1.4 Removing the Front chassis (See Fig.8, 9)

(1) Remove the three screws **M** attaching the Front chassis. (See Fig.8)

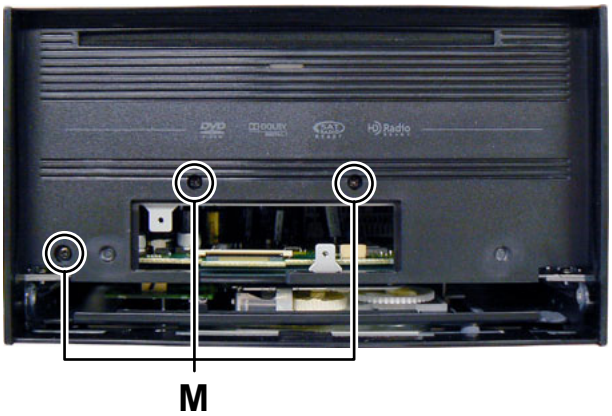

Fig.8

(2) Remove the four screws **N** attaching the both side of the Front chassis. (See Fig.9)

(3) Disengage two hooks **b** engaged both side of the Front chassis. (See Fig.9)

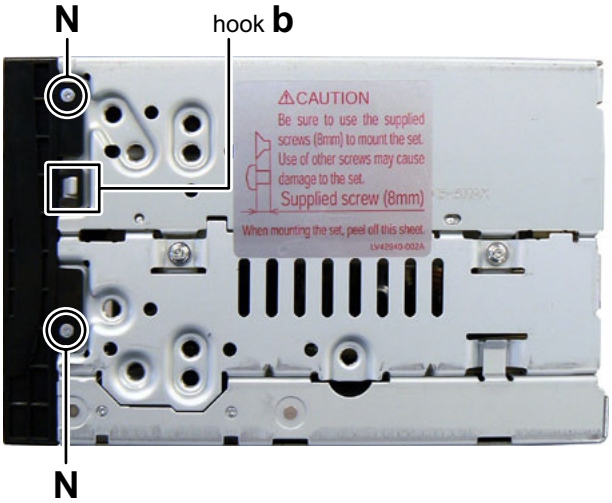

Fig.9

3.1.5 Removing the Top chassis (See Fig.10, 11)

(1) Remove the two screws **P** attaching the Top chassis. (See Fig.10)

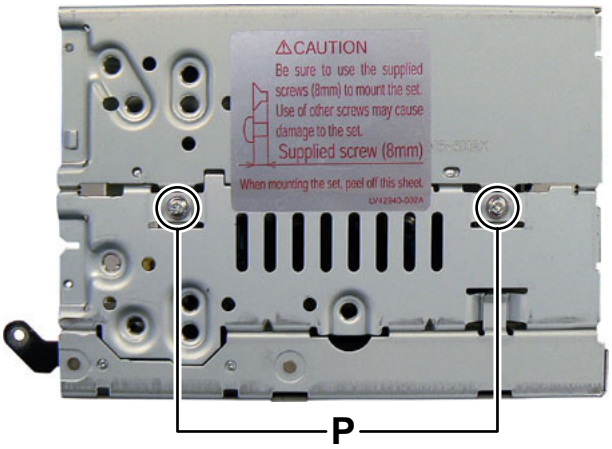

Fig.10

(2) Remove the two screws **Q** attaching the Top chassis. (See Fig.11)

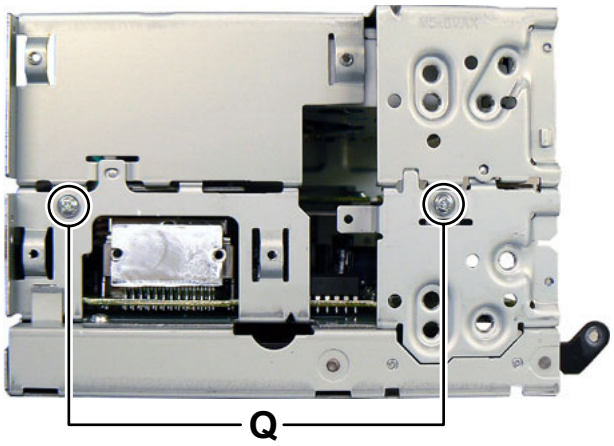

Fig.11

3.1.6 Removing the Main board (See Fig.12)

(1) Disconnect the connector wire from Door switch board connected to connector CN961 of the Main board.

(2) Remove the four screws **R** attaching the Main board.

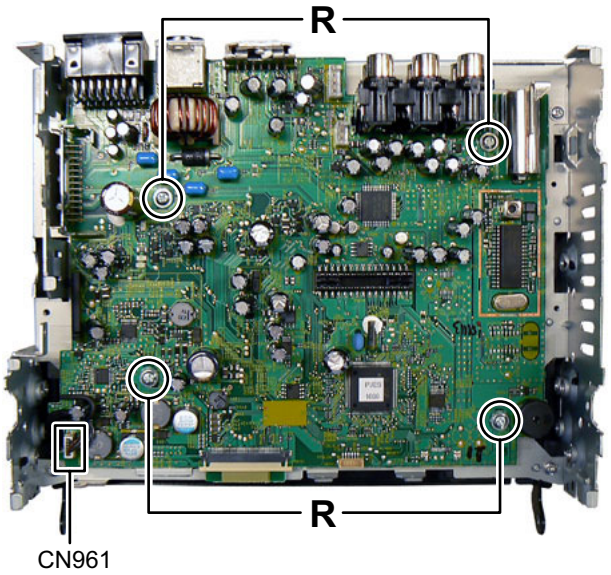

Fig.12

3.1.7 Removing the DVD mechanism (See Fig.13 to 16)

(1) Remove the four screws **S** attaching the Sub board bracket. (See Fig.13)

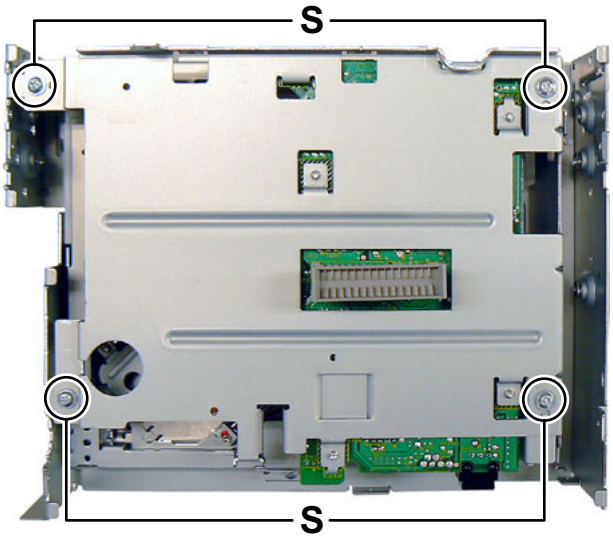

Fig.13

(2) Disconnect the card wire from Sub board connected to connector CN403 of the Front end board. (See Fig.14)

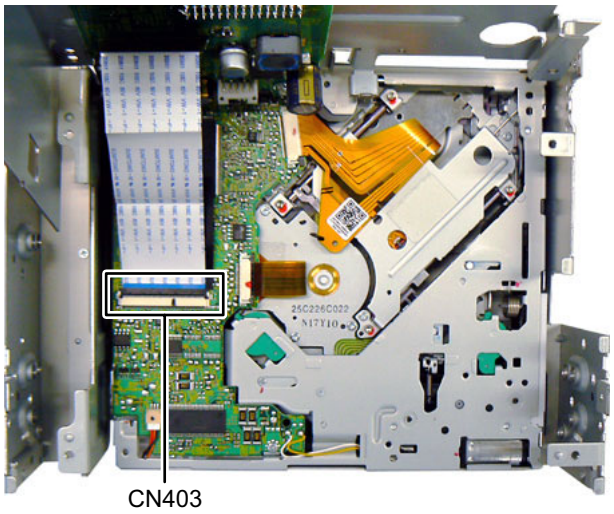

Fig.14

(3) Remove the three screws **T** attaching the Support bracket. (See Fig.15)

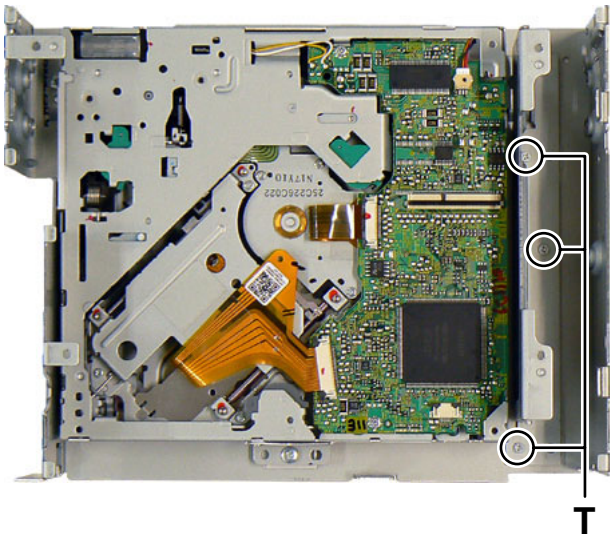

Fig.15

(4) Remove the three screws **U** attaching the DVD mechanism. (See Fig.16)

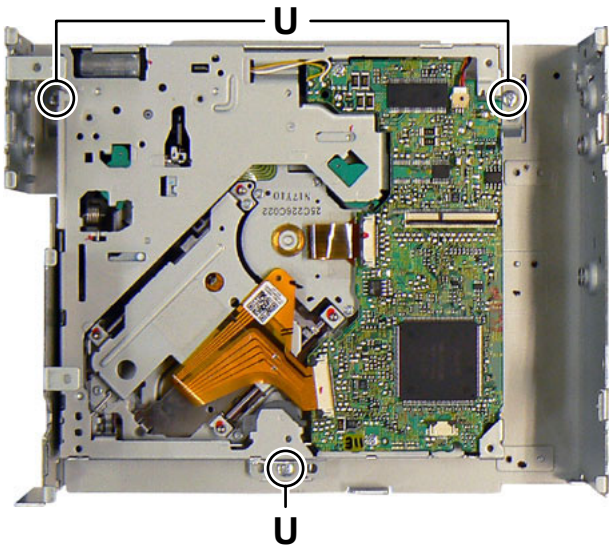

Fig.16

3.2 Monitor section

3.2.1 Removing the Front bracket (See Fig.1)

(1) Remove the two screws **A** attaching the FPC cover.
(2) Remove the four screws **B** attaching the Front bracket.
(3) Remove the two screws **C** attaching the Front bracket.

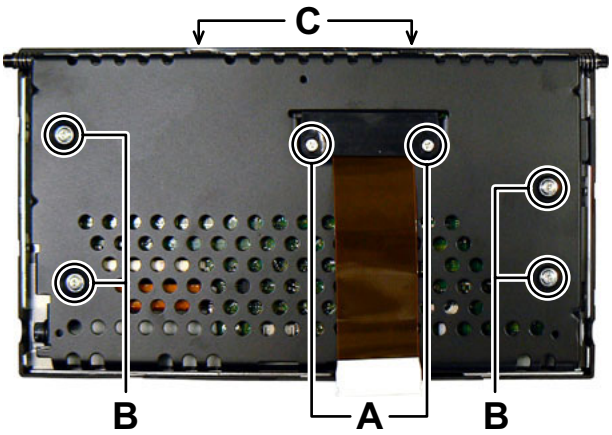

Fig.1

3.2.2 Removing the Panel board (See Fig.2)

(1) Remove solder of hook **a** and straighten it.
(2) Disconnect the connector wire from LCD module connected to connector CN607 of the Panel board.
(3) Disconnect the FPC connected to connector CN601, CN602 and CN606 of the Panel board.
(4) Remove the four screws **D** attaching the Panel board.

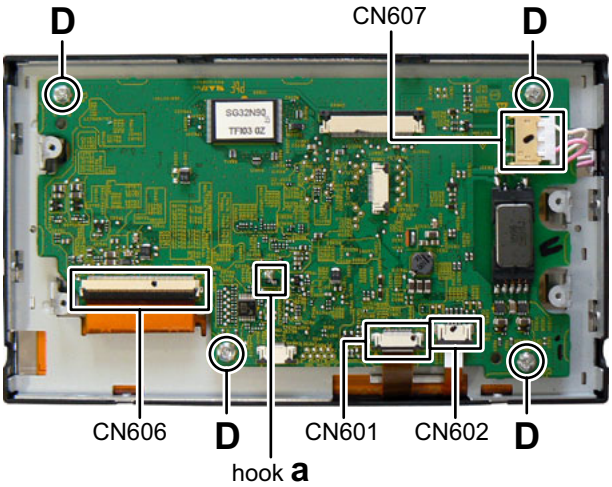

Fig.2

3.2.3 Removing the LCD module (See Fig.3)

(1) Remove the six screws **E** attaching the Panel bracket.

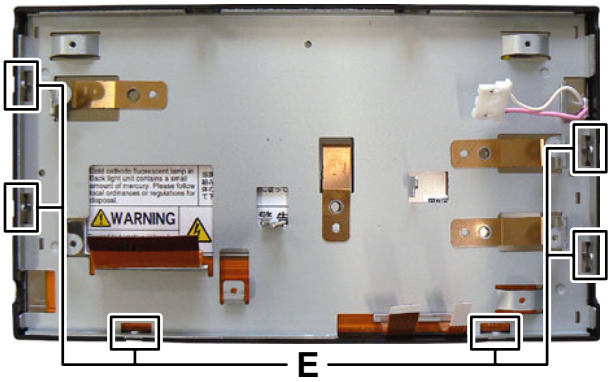

Fig.3

3.3 DVD mechanism assembly section

3.3.1 Removing the Traverse mechanism assembly (See Fig.1 to 6)

(1) Solder the short land section on the flexible wire of pickup. (See Fig.1)

Caution:

* Solder the short land section on the flexible wire of pickup before disconnecting the flexible wire form the connector CN101 on the Front end board.
If the flexible wire is disconnected without attaching the solder, the pickup may be destroyed by static electricity.
* When attaching the Traverse mechanism assembly, remove the solder from the short land section after connection the flexible wire to the connector CN101 on the Front end board.

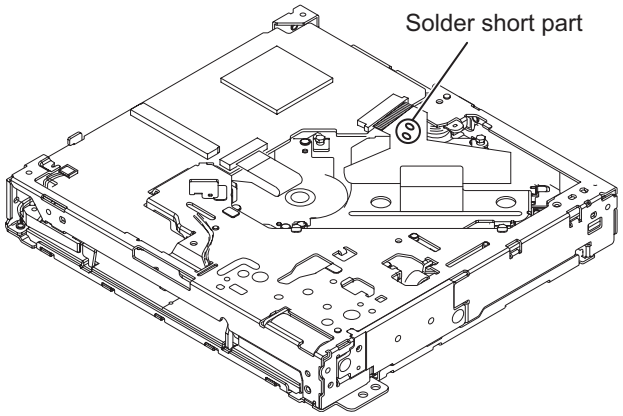

Fig.1

(2) Voltage supply to TP79 and TP81 approx DC 3.0V until Clamper is shift to loading complete position. (See Fig.2)

(3) Disconnect the flexible wires from Traverse mechanism assembly connected to connector CN101 and CN164 of the Front end board. (See Fig.2)

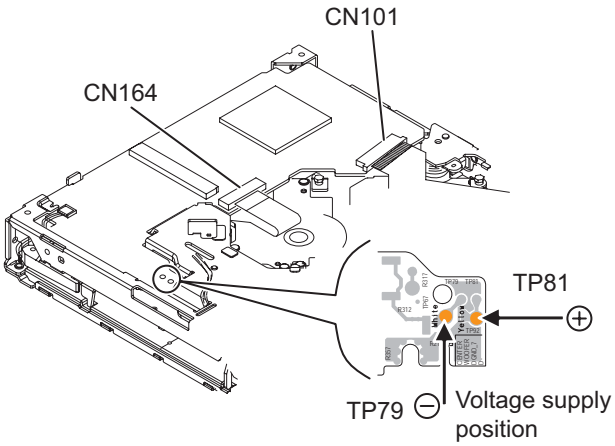

Fig.2

(4) Remove the five screws **A** attaching the Top cover assembly. (See Fig.3)

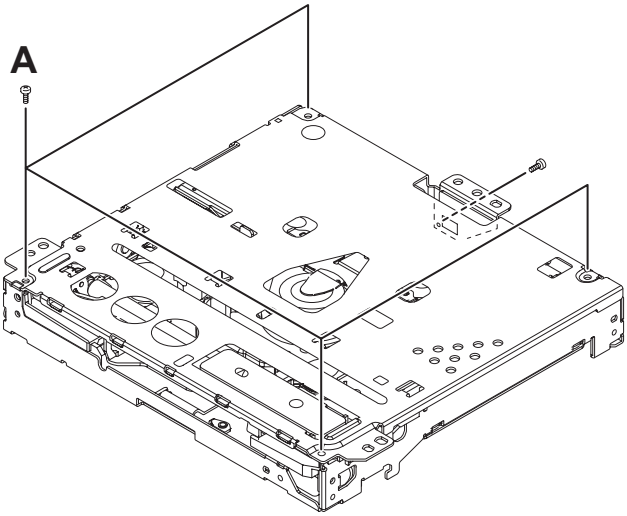

Fig.3

(5) From the bottom side, disconnect the connector wire from Top cover assembly connected to connector CN2 of the Front end board. (See Fig.4)

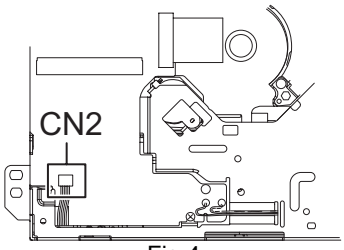

Fig.4

(6) From the bottom side, remove the spring from Traverse mechanism assembly. (See Fig.5)

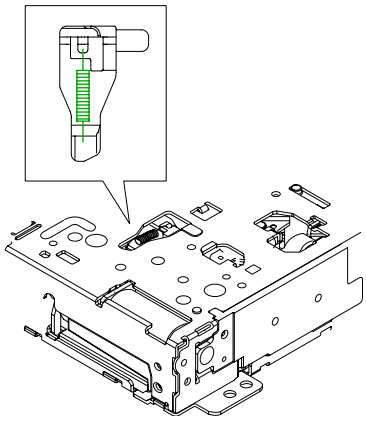

Fig.5

(7) From the top side, pull up the traverse mechanism and disengage three dumper positions. (See Fig.6)

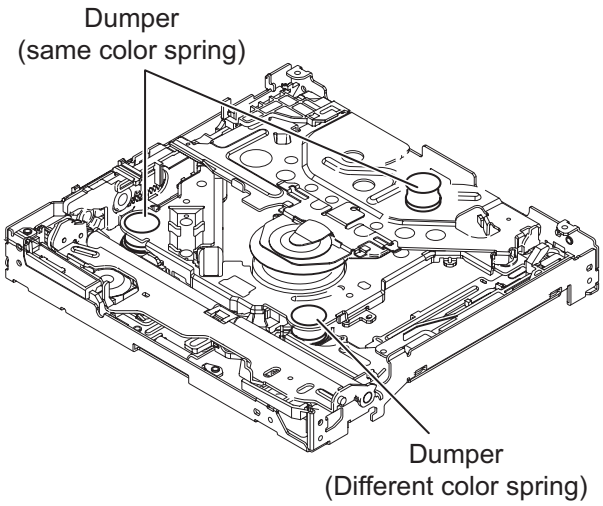

Fig.6

3.3.2 Removing the Front end board (See Fig.7)

(1) Remove the Motor wires from loading motor soldered to TP79 and TP81 of the Front end board.

(2) Remove the two screws **B** attaching the Front end board.

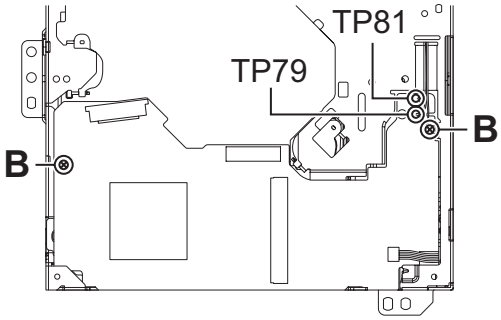

Fig.7

3.3.3 Removing the Loading arm assembly (See Fig.8)

(1) Remove the Loading arm spring L from Loading arm assembly.

(2) Slide to left side and then disengage hook **a** then hook **b**.

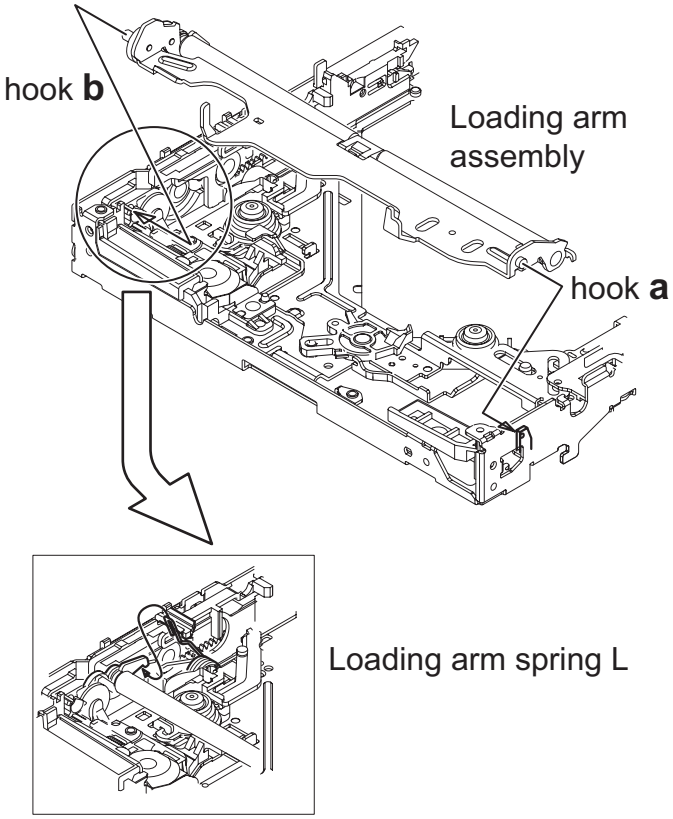

Fig.8

3.3.4 Removing the Gear base assembly (See Fig.9, 10)

(1) Remove the Loading arm spring L. (See Fig.9)

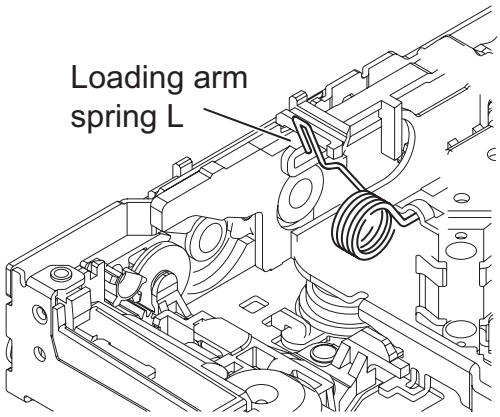

Fig.9

(2) Remove the two screws **C** attaching the Gear base assembly. (See Fig.10)

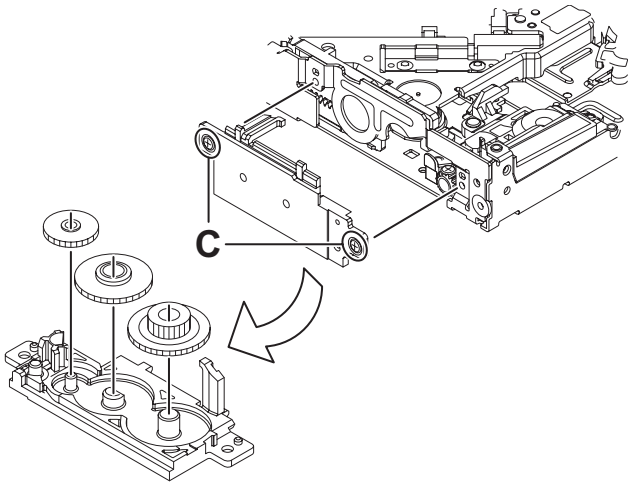

Fig.10

3.3.5 Removing the Loading arm holder. (See Fig.11)

(1) Remove the two screws **D** attaching the Loading arm holder.
(2) Remove the Loading arm spring R.

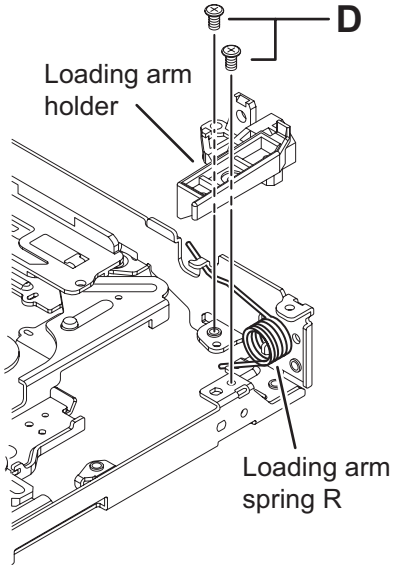

Fig.11

3.3.6 Removing the Loading moor assembly (See Fig.12)

(1) Remove the three screws **E** attaching the Loading motor assembly.

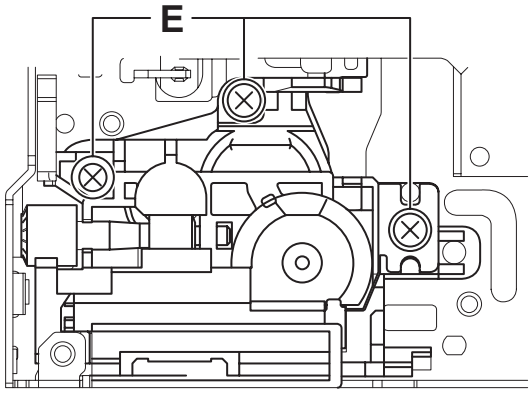

Fig.12

3.3.7 Removing the Slide cam assembly (See Fig.13)

(1) Slide to backward the Slide cam assembly and the remove the Slide cam spring.
(2) Slide to frontward the slide cam assembly, and then take out it.

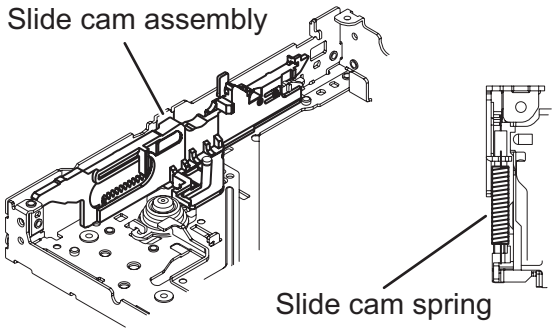

Fig.13

3.3.8 Removing the Photo board (See Fig.14)

(1) Pressing the hook **c** and then slide to backward (slide to the arrow side) the Disc plate.
(2) Remove the one screw **F** attaching the Photo board.

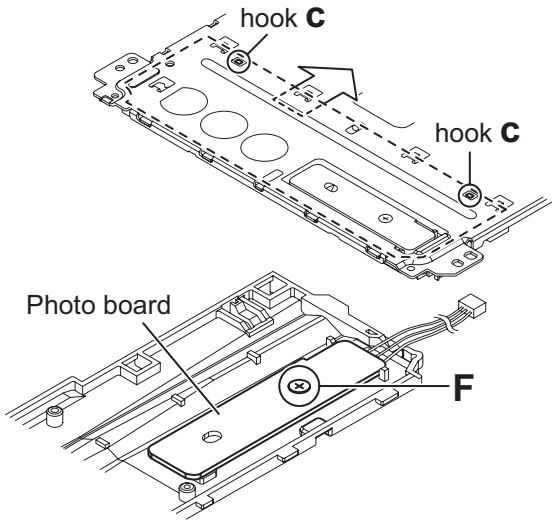

Fig.14

3.3.9 Removing the Loading motor (See Fig.15 to 18)

(1) Remove the A wheel gear. (See Fig.15)

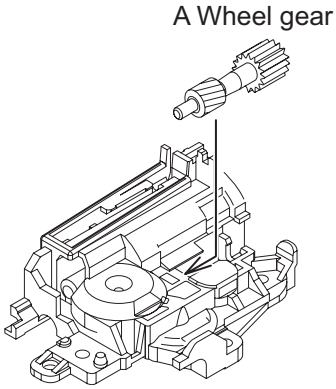

Fig.15

(2) Remove the A worm gear, M connect gear and M wheel gear by sequentially. (See Fig.16)

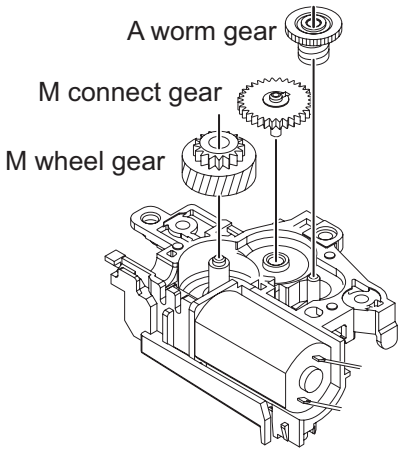

Fig.16

(3) Remove the two screws **G** attaching the Loading motor. (Se Fig.17)

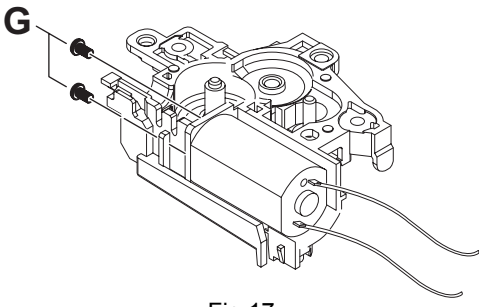

Fig.17

(4) When attaching the Loading motor, motor wire should arrange to figure. (See Fig.18)

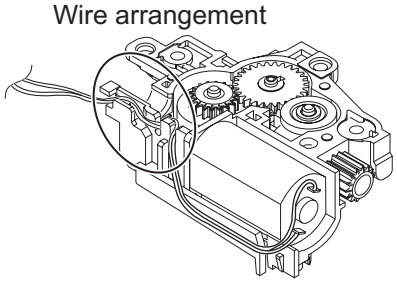

Fig.18

3.3.10 Removing the Roller assembly (See Fig.19)

(1) Remove the Slit washer.
(2) Remove the R middle gear.
(3) Remove the R connect gear.
(4) Snap off the part **a** of the Roller assembly.
(5) Lift up the part **b** of the Roller assembly, and then release part **c** (When release part **c**, R collar R is easy to come off, does not lose it).

CAUTION:

When reattach the Roller assembly, Middle gear should keep direction and Slit washer should be change new part.

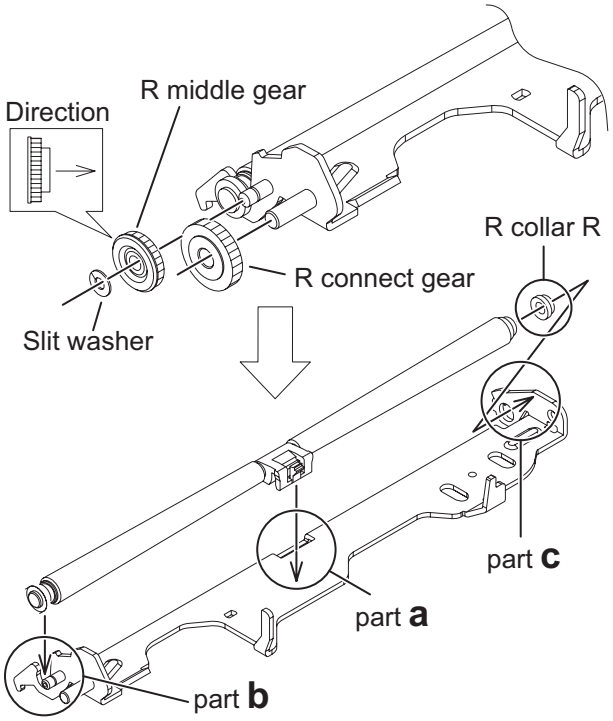

Fig.19

3.3.11 Removing the Roller (See Fig.20)

(1) Remove the Slit washer.
(2) Pull out the Roller shaft.

CAUTION:

When reattach the Roller shaft, Slit washer should be change new part.

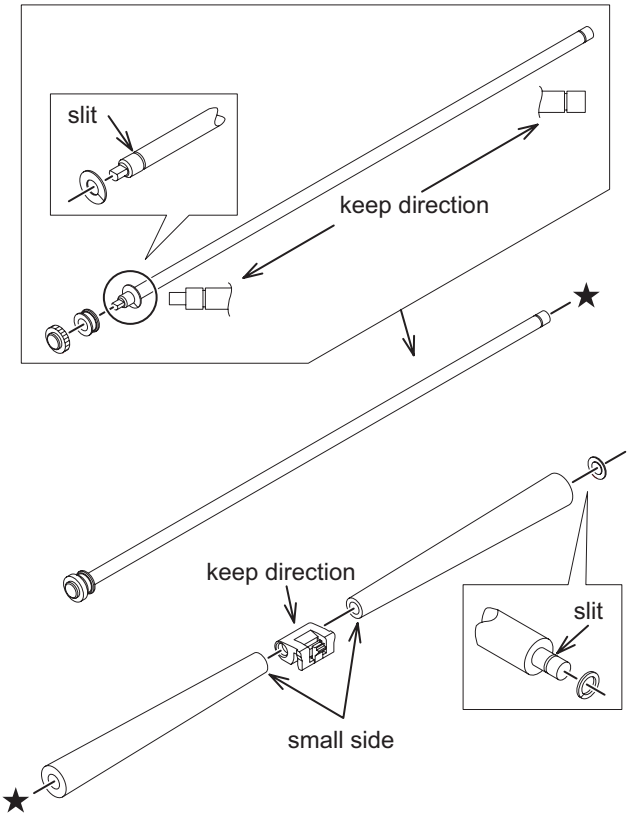

Fig.20

SECTION 4
ADJUSTMENT

4.1 Test instruments required for adjustment

(1) Digital oscilloscope (100MHz)
(2) Digital tester
(3) Test Disc
(4) Extension cable : EXTXD001-50PF
EXTDV002-30P
EXTCN001-6P
(5) Extension stud : STDV001-3P

4.2 Standard measuring conditions

Power supply voltage DC14.4V(10.5 to 16V)
Load impedance 20K ohm (2 Speakers connection)
Output Level Line out 2.5V (Vol. MAX)

4.3 Standard volume position

Balance and Bass &Treble volume : Indication"0"
Loudness : OFF

4.4 Dummy load

Exclusive dummy load should be used for AM,and FM.
For FM dummy load, there is a loss of 6dB between SSG output and antenna input.
The loss of 6dB need not be considered sincedirect reading of figures are applied in this working standard.

4.5 How to connect the extension cable for adjusting

Caution:

Be sure to attach the heat sink and rear bracket onto the power amplifier IC and regulator IC respectively, before supply the power. If voltage is applied without attaching these parts, the power amplifier IC and regulator IC will be destroyed by heat.

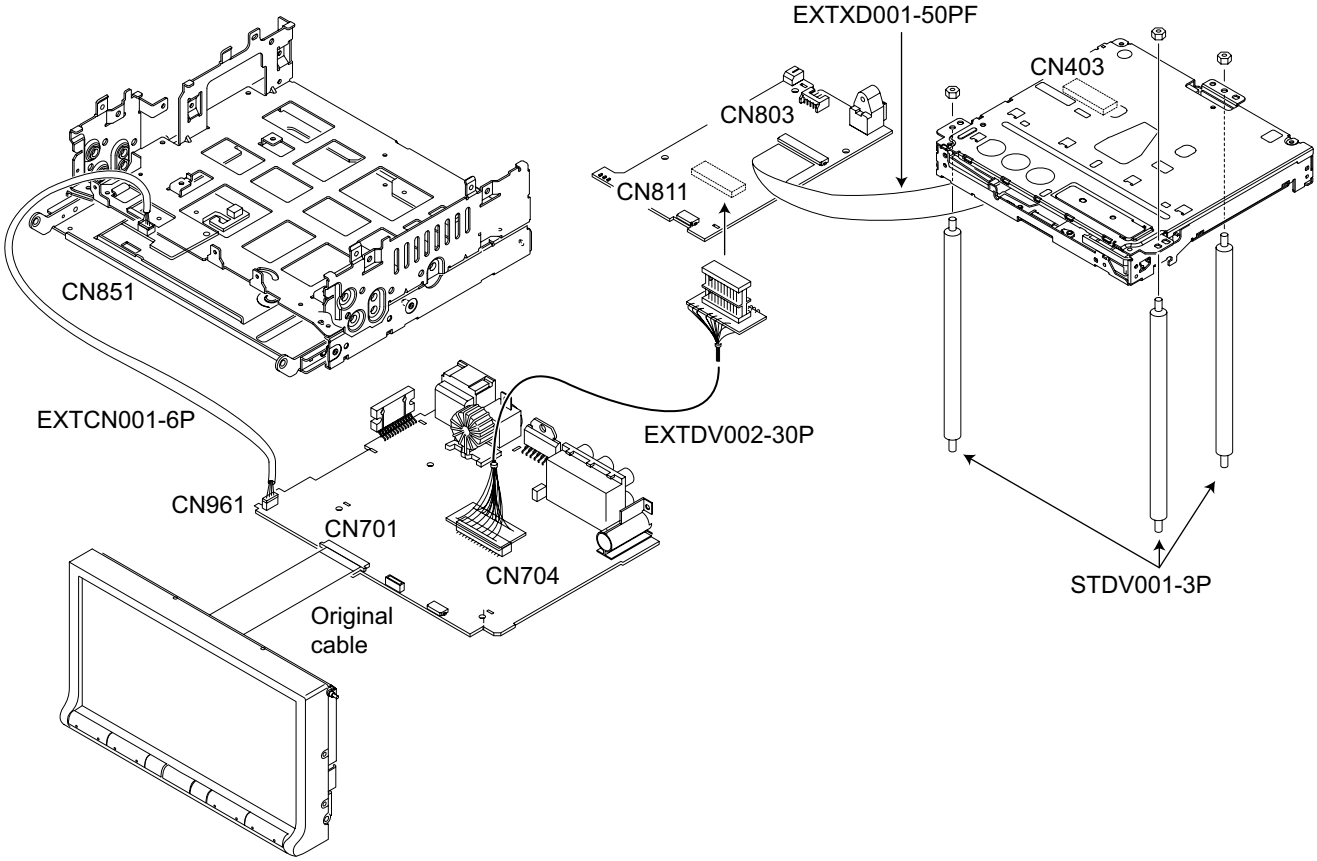

4.6 Service mode

4.6.1 Button position

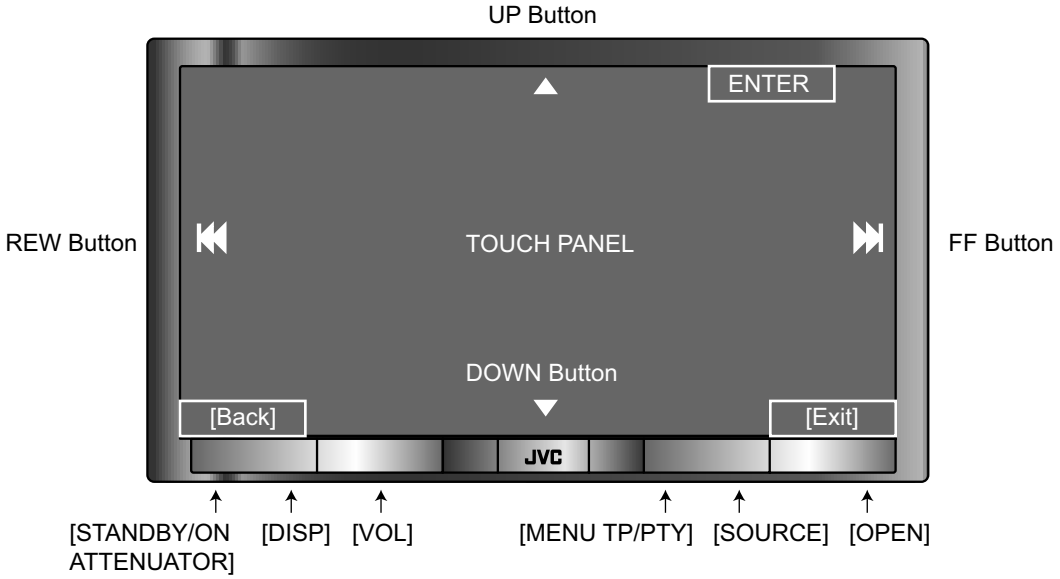

4.6.2 Service mode 1 (Indication of a service mode 1 is nothing.)

Keep this state more 2 seconds while continuing pressing the [STANDBY/ON ATTENUATOR] button and [OPEN] button sequentially.

Screen indication

NO EJECT?	*1
EMERGENCY EJECT?	*2

Exchanging it operate a menu of a service mode with the [UP] button and [DOWN] button. Operate choice of a menu with a [ENTER] button.

*1 : When an [ENTER] button is pushed in NO EJECT indication, it is set by an EJECT prohibition mode.
When an [ENTER] button is pushed in EJECT OK indication, it is set by a normal mode.

*2 : Forced EJECT movement

A screen becomes normal indication after an [ENTER] button was pushed.

4.6.3 Service mode 2

Keep this state more 2 seconds while continuing pressing the [MENU or TP/PTY] button, [SOURCE] button and TOUCH PANEL [DOWN] button sequentially.

Screen indication

SERVICE MODE 2
- INITIALIZE ALL
- INITIALIZE
- INITIALIZE DVD
- INITIALIZE BT
- TOUCH PANEL CALIBRATION
- TOUCH PANEL CHECK MODE

Exchanging it operate a menu of a service mode with the [UP] button and [DOWN] button. Operate choice of a menu with a [ENTER] button.

INITIALIZE ALL

NOW ···
INITIALIZE ALL

INITIALIZE ALL
OK **

INITIALIZE ALL
(Each EEPROM is initialized by a factory shipment state.)
* Main micon EEPROM initialization (user entry domain, error history, speaker setting, sub area of J-version, data to pre-set)
* Panel micon EEPROM initialization (picture adjustment data)

INITIALIZE

NOW ···
INITIALIZE

INITIALIZE
OK **

INITIALIZE (Initialization of a user area of each EEPROM)
* Main micon EEPROM initialization (a user entry domain) (a user entry domain, speaker setting, sub area of J-version, data to pre-set)
* Panel micon EEPROM initialization (picture adjustment data)
* DVD unit EEPROM initialization (except a permanent domain)
* Bluetooth (Module/Hideaway) EEPROM initialization
* After clear completion, a screen returns to normal indication after OK indication was displayed for three seconds.

INITIALIZE DVD

INITIALIZE DVD
OK ***

Full initialization of EEPROM of a DVD unit (It is included a permanent domain)
After clear completion, this indication is continued till an effective key is input.

INITIALIZE BT

INITIALIZE BT
OK ***

Full initialization of EEPROM of Bluetooth (Module/Hideaway)
After clear completion, this indication is continued till an effective key is input.

TOUCH PANEL CALIBRATION

Push the center of a + character displayed in turn.

TOUCH PANEL CHECK MODE

The confirmation mode that the calibration of the touch panel was performed definitely.

*Return to previous menu with a [DISP] button.

4.6.4 Service mode 3

Keep this state more 2 seconds while continuing pressing the [MENU or TP/PTY] button, [VOLUME -] button and TOUCH PANEL [DOWN] button sequentially.

Screen indication

```
SERVICE MODE 3
  SERVICE MODE
  INITIALIZE ALL
  RUNNING MODE
```

Exchanging it operate a menu of a service mode with the [UP] button and [DOWN] button. Operate choice of a menu with a [ENTER] button.

SERVICE MODE

```
SERVICE MODE
  VERSION
  AREA/REGION
  TEMPERATURE
  MEMORY CHECK
  DVD NTSC/PAL
  DVD CHECK MODE
```

* Exchanging it operate a menu of a service mode with the [UP] button and [DOWN] button.
* Operate choice of a menu with a [ENTER] button.
* Return to previous menu with a [BACK] button.

```
SERVICE MODE
  ERROR READ
  ERROR CLEAR
  BT VERSION
```

```
VERSION
  MAIN    V**** [**]
  DISC    ****
  CH      ******
  PA      V**** V*** [**]
```

Micon version indication
Main micon version and ROM correction version
DVD module version
CH version
Panel micon version and ROM correction version

```
AREA/REGION
  SYS-AREA     : **
  DISC-AREA    : **
  REGION       : *
  PANEL-AREA   : **
```

Area and region indication
Main micon area
DVD module area
Region
Panel area

TEMPERATURE Temperature data reading
* Temperature data by the temperature sensor in the main micon and DVD module is read every 5 seconds and displayed in hex numbers.

MEMORY CHECK (It is displayed only at the time of the disc insertion)
Memory residual quantity indication mode
* Data residual quantity of a disc is displayed by LCD.
* About the playback control-related key ([FSKIP], [BSKIP], [UP], [DOWN], [VOL]), only movement is effective. Indication does not change as memory residual quantity indication.
* About cancellation of this mode, press the [STANDBY/ON ATTENUATOR] button.

```
DVD NTSC/PAL
  NTSC
  PAL
```

DVD picture change
DVD unit output picture setting (NTSC)
DVD unit output picture setting (PAL)

DVD CHECK MODE
* See "DVD CHECK MODE" for details.

```
ERROR READ
  DVD ERROR READ
  CH ERROR READ
  MECHA ERROR READ
  READ ALL
```

DVD ERROR READ
Reading of a DVD unit error history

CH ERROR READ
Reading of a CD changer error history

MECHA ERROR READ
Reading of a door mechanism error history

READ ALL
Reading of a main micon EEPROM (All contents)

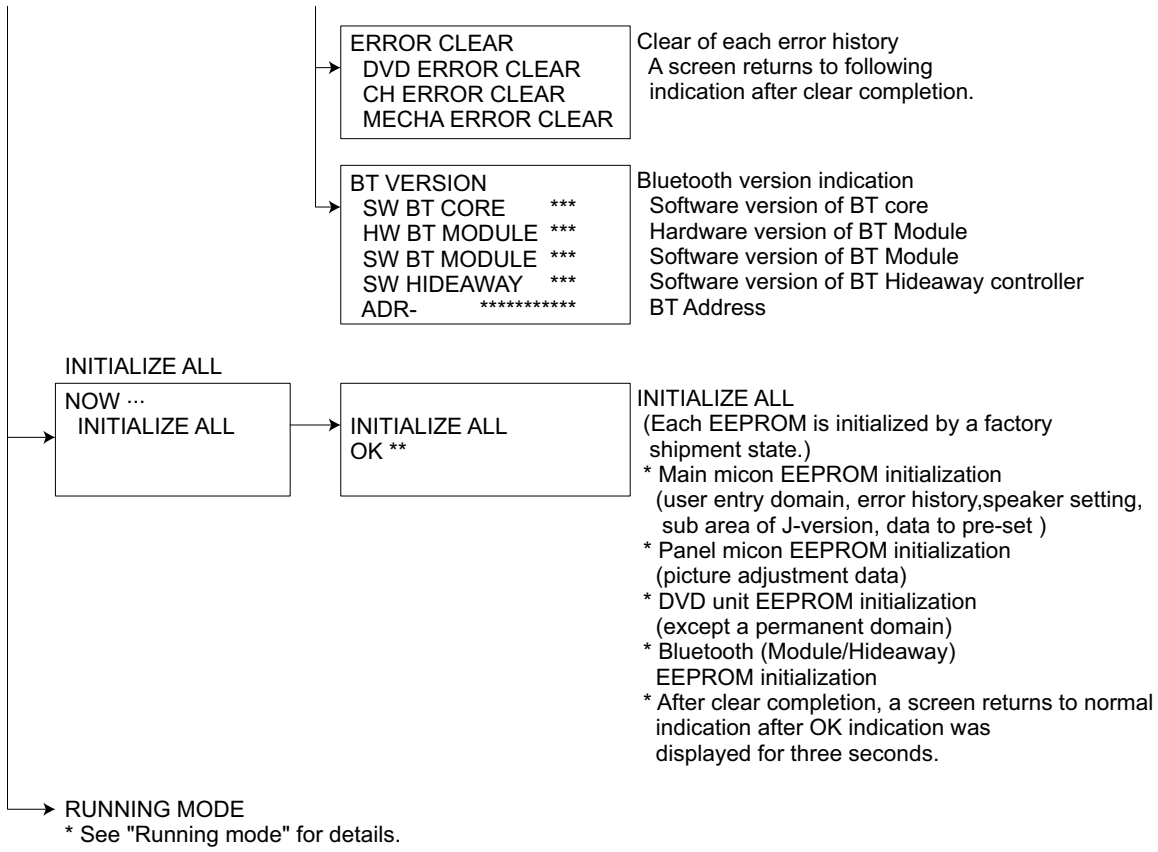

4.6.5 Service mode 4

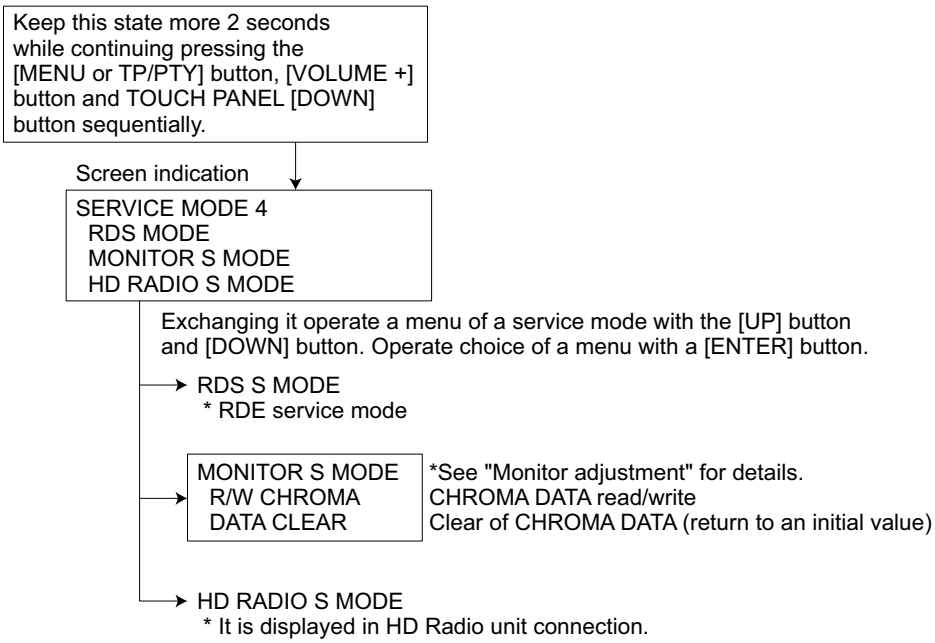

4.7 DVD check mode

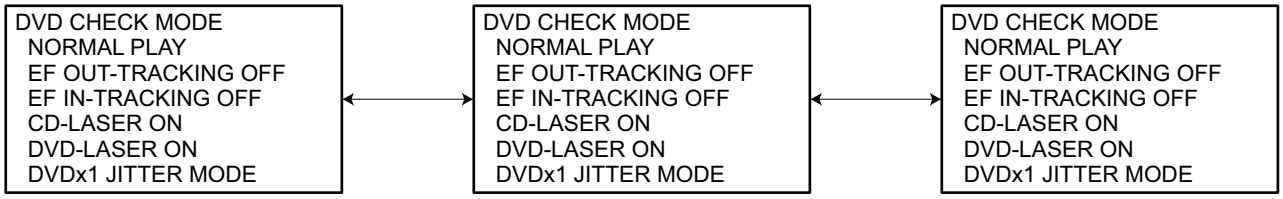

Exchanging it operate a menu of a service mode with the [UP] button and [DOWN] button. Operate choice of a menu with a [ENTER] button.

Command	Mechanism unit operation	Indication contents
NORMAL PLAY	Start at normal speed (After start, jitter is measured by an inner position.)	Laser current value, jitter value
EF OUT-TRACKING OFF	Tracking off the outermost position of CD	For EF phase error
EF IN-TRACKING OFF	Tracking off the innermost position of CD	For EF phase error
CD-LASER ON	CD_LD lights and laser current is displayed.	Laser current value, jitter value
DVD-LASER ON	DVD_LD lights and laser current is displayed	Laser current value, jitter value
DVDx1 JITTER MODE	DVD x1 jitter measuring mode (for use in mechanism adjustment)	Laser current value, jitter value
EEPROM DATA DISP	Contents of EEPROM is displayed.	EEPROM address EEPROM contents
EEPROM DATA CLEAR	Contents of EEPROM is initialized.	EEPROM address EEPROM contents
TEMPERATURE	Temperature indication	Temperature is displayed in hex numbers.
SEARCH & JITTER	The search and jitter measurement to an appointed position of DVD.	Position measured with VT-501 jitter value
MONITOR	Monitor terminal setting	
PLAY	DVD x1 stopped start (After start, jitter is measured by an inner position.)	Not displayed.
STOP	Disc stopped, LD-OFF	Not displayed.
OPEN	OPEN	Not displayed.
CLOSE	CLOSE	Not displayed.

4.8 Error code tables

4.8.1 Mechanism error code

Error contents	Details	Error code	Detailed error code
Disc loading error (1) D1 time out		09	0013
Eject error (3) B1 time out (4) C1 time out		01 01	0023 0024
Error in loading wait	Loading of a running mode Disc was pulled out in a wait.	09	0031

4.8.2 Disc error code

Error contents	Details	Error code	Detailed error code
TOC read error	TOC lead movement of a CD is not completed.	84	0059
First track access error	Even if TOC reading passes after the end with CD running mode for 30 seconds, the first track access is not finished.	80	0060
Last track access error	Even if first track passes after the end with CD running mode for 30 seconds, the last track access is not finished.	80	0061
T1 access error	Even if T1 access passes in a DVD running mode for 30 seconds, it is not finished.	80	0069
T12 access error	Even if T12 access passes in a DVD running mode for 30 seconds, it is not finished.	80	0070
T24 access error	Even if T24 access passes in a DVD running mode for 30 seconds, it is not finished.	80	0071
Read-in area read error	Read-in area read operation of DVD is not completed.	84	0072
DVD L1 layer adjustment error	Adjustment of L1 layer of DVD is not finished normally. (including focus jump failure)	80	0074
DVD L0 layer adjustment error	Adjustment of L0 layer of DVD is not finished normally. (including focus jump failure)	80	0075
NO DISC judgment	Judgment without disc	80	0090
It is NO DISC by start failure	Start is impossible	80	0091
It is stopped by playback inability.	Stop in running mode playback	80	0093
Logic format NG	Logic format analysis inability or non-correspondence logic format	80	0094
Seek access error	It cannot arrive at an aim address even if it passes for 15 seconds.	80	0095

4.8.3 Error codes of panel mechanism

*As for two columns of the beginning of the error code, as for error contents, two columns of middle, number of the pulse counts, last two columns are a purpose position and movement directions.

Error contents	code
Time out	OB
Position error by the external force	OC
Abnormal voltage (1)	F3
Abnormal voltage (2)	F5
Abnormal voltage (3)	F7
Abnormal voltage (4)	F8

When assumed last two columns XY;, as for X, as for purpose position, Y, is a movement direction.

Purpose position	X
CLOSE	1
5 degrees	2
10 degrees	3
15 degrees	4
20 degrees	5
25 degrees	6
30 degrees	7
OPEN	8

Movement direction	Y
Open direction	0
Close direction	1

Detail	Error code (Service mode)
It is time-out during movement to the closed position.	0B**11
It is time-out during 5 degrees tilt movement.(open direction)	0B**20
It is time-out during 5 degrees tilt movement.(close direction)	0B**21
It is time-out during 10 degrees tilt movement.(open direction)	0B**30
It is time-out during 10 degrees tilt movement.(close direction)	0B**31
It is time-out during 15 degrees tilt movement.(open direction)	0B**40
It is time-out during 15 degrees tilt movement.(close direction)	0B**41
It is time-out during 20 degrees tilt movement.(open direction)	0B**50
It is time-out during 20 degrees tilt movement.(close direction)	0B**51
It is time-out during 25 degrees tilt movement.(open direction)	0B**60
It is time-out during 25 degrees tilt movement.(close direction)	0B**61
It is time-out during 30 degrees tilt movement.(open direction)	0B**70
It is time-out during 30 degrees tilt movement.(close direction)	0B**71
It is time-out during movement to the open position.	0B**80
It is time-out during movement to the open position.	0B**80
It is position error during close position stop.	0C0011
It is position error during 5 degree tilt position stop.	0C0020
It is position error during 10 degree tilt position stop.	0C0030
It is position error during 15 degree tilt position stop.	0C0040
It is position error during 20 degree tilt position stop.	0C0050
It is position error during 25 degree tilt position stop.	0C0060
It is position error during 30 degree tilt position stop.	0C0070
It is position error during open position stop.	0C0080
Detect abnormal voltage (1)	F3**XY
Detect abnormal voltage (2)	F5**XY
Detect abnormal voltage (3)	F7**XY
Detect abnormal voltage (4)	F8**XY

Note: "**" of the above error code is the number of the pulse counts at the time of the error outbreak.

4.9 Running mode

Indication	Explanation	Operation contents of 1 cycle	In mecha error	In disc error
RUNNING1 MECHA	Door mecha running 1	Panel close ↔ Panel open	-	-
RUNNING2 MECHA	Door mecha running 2	Panel close → 5 degrees → 10 degrees → 15 degrees → 20 degrees → 25 degrees → 30 degrees → Panel open	-	-
RUNNING3 MECHA	Door mecha running 3	Panel → close → 5 degrees → ···· → 30 degrees → ···· → 5 degrees → Panel close	-	-
RUNNING4 DVD	DVD+Door mecha running1	Loading → Eject → Wait for 5 seconds+Door open/close	Stop	-
RUNNING5 DVD	DVD+Door mecha running2	Loading → Eject → Wait for 5 seconds+Door open/close	Retry	-
RUNNING6 DVD	DVD+Door mecha running3	Loading → Playback → Eject → Wait for 5 seconds+Door open/close	Stop	Stop
RUNNING7 DVD	DVD+Door mecha running4	Loading → Playback → Eject → Wait for 5 seconds+Door open/close	Retry	Stop
RUNNING8 DVD	DVD+Door mecha running5	Loading → Playback → Eject → Wait for 5 seconds+Door open/close	Stop	Retry
RUNNING9 DVD	DVD+Door mecha running6	Loading → Playback → Eject → Wait for 5 seconds+Door open/close	Retry	Retry

* Cancellation of running1,2 and 3 : Press the [EJECT] key
* In running 1,2 and 3 cancellation, a door does not stop at the position and moves to a panel position.
* Cancellation of running4 to 9 : Press the [POWER] key
* The number of count and an error cord are displayed in running.

Playback contents in a running mode

- CD
  The first track is played for 30 seconds. → The last track is played for 30 seconds.
  (The last track is played in the case of less than till the last for 30 seconds.)
- DVD
  2layer disc (Pit disc)
  Title 1 (the L0 layer internal circumference) is played for 30 seconds. → Title 12 (L0 layer circumference) is played for 30 seconds. → Title 24 (L1layer internal circumference) is played for 30 seconds.

  2layer disc (Recordable disc)
  Title 1 (the L0 layer internal circumference) is played for 30 seconds. → Title 13 (L0 layer circumference) is played for 30 seconds. → Title 24 (L1layer internal circumference) is played for 30 seconds.

  1layer disc
  First chapter of title 1 is played for 30 seconds. → The last chapter of title 1 is played for 30 seconds

4.10 Monitor adjustment

* When adjusting, switch on the main unit and insert a test disc (VT-501). And play the test disc and pause it.
1. Set the service mode 4.
2. Exchanging it operate a menu of a service mode with the [UP] button and [DOWN] button.
3. Change data with the [B.SKIP]/[F.SKIP] buttons.
4. Write data with a [ENTER] button.

R/W CHROMA

Indication	Minimum value	Maximum value	Initial value	Reference register value		Detail
00001	00000	00001	00000	00000	Fix	Color amplitude revision ON/OFF
00002	00000	00003	00000	00000	Fix	Color amplitude revision CAS
00003	00000	00063	00000	00000	Fix	Color amplitude revision APC
00004	00000	00003	00000	00000	Fix	Color amplitude revision CUS
00005	00000	00063	00000	00000	Fix	Color amplitude revision APU
00006	00000	00001	00000	00000	Fix	Black level extension ON/OFF
00007	00000	00001	00001	00001	Fix	Black level extension FUNCTION
00008	00000	00511	00176	00176	Fix	Black level extension START POINT
00009	00000	00511	00128	00128	Fix	Black level extension OFFSET
00010	00000	00255	00128	00128	Adjust	Enhancer revision effect adjustment (NTSC)
00011	00000	00255	00128	00128	Adjust	Enhancer revision effect adjustment (PAL)
00012	00000	00255	00064	00064	Adjust	Limiter of the horizontal enhancer (NTSC)
00013	00000	00255	00068	00068	Adjust	Limiter of the horizontal enhancer (PAL)
00014	00000	00255	00000	00000	Adjust	Filter choice of the horizontal enhancer (NTSC)
00015	00000	00255	00000	00000	Adjust	Filter choice of the horizontal enhancer (PAL)
00016	00000	00003	00001	00001	Adjust	Tap change of the brightness outline revision (NTSC)
00017	00000	00003	00001	00001	Adjust	Tap change of the brightness outline revision (PAL)
00018	00000	00127	00000	00000	Adjust	Adjustment of the quantity of brightness outline core ring (NTSC)
00019	00000	00127	00000	00000	Adjust	Adjustment of the quantity of brightness outline core ring (PAL)
00020	00000	00006	00000	00000	Adjust	Adjustment of the brightness outline revision gain (NTSC)
00021	00000	00006	00000	00000	Adjust	Adjustment of the brightness outline revision gain (PAL)
00022	00000	00255	00125	00125	Fix	Change in TINT of the whole picture (NTSC)
00023	00000	00255	00125	00125	Fix	Change in TINT of the whole picture (PAL)
00024	00000	00255	00090	00090	Fix	Change with the deepness of the color of the whole picture (NTSC)
00025	00000	00255	00100	00100	Fix	Change with the deepness of the color of the whole picture (PAL)
00026	00000	00255	00131	00131	Adjust	Tint adjustment (NTSC)
00027	00000	00255	00131	00131	Adjust	Tint adjustment (PAL)
00028	00000	00255	00051	00051	Adjust	Color adjustment (NTSC)
00029	00000	00255	00051	00051	Adjust	Color adjustment (PAL)
00030	00000	00511	00094	00094	Fix	Set the offset DC of the input video signal (NTSC)
00031	00000	00511	00094	00094	Fix	Set the offset DC of the input video signal (PAL)
00032	00000	00001	00000	00000	Fix	Quantity of transmission revision of the YUV DC
00033	00000	00255	00016	00016	Fix	Quantity of transmission revision of the YUV DC
00034	00000	01023	00320	00320	Adjust	Contrast adjustment between the black - white (NTSC)
00035	00000	01023	00322	00322	Adjust	Contrast adjustment between the black - white (PAL)
00036	00000	00511	00348	00348	Fix	Conversion coefficients from YUV to RGB (PRCL)
00037	00000	00255	00210	00210	Fix	Conversion coefficients from YUV to RGB (PBCL)
00038	00000	00255	00210	00210	Fix	Conversion coefficients from YUV to RGB (YCL)
00039	00000	00255	00158	00158	Fix	Conversion coefficients from YUV to RGB (BCL)
00040	00000	00511	00267	00267	Fix	Conversion coefficients from YUV to RGB (RCL)
00041	00000	00001	00001	00001	Fix	Noise shaving (NTSC)
00042	00000	00001	00001	00001	Fix	Noise shaving (PAL)
00043	00000	00127	00029	00029	Adjust	Black level adjustment (NTSC)
00044	00000	00127	00028	00028	Adjust	Black level adjustment (PAL)

Indication	Minimum value	Maximum value	Initial value	Reference register value		Detail
00045	00000	00127	00058	00058	Fix	Gain setting of Red signal (NTSC)
00046	00000	00127	00059	00057	Fix	Gain setting of Red signal (PAL)
00047	00000	00127	00057	00057	Fix	Gain setting of Green signal (NTSC)
00048	00000	00127	00059	00056	Fix	Gain setting of Green signal (PAL)
00049	00000	00127	00054	00054	Fix	Gain setting of Blue signal (NTSC)
00050	00000	00127	00053	00053	Fix	Gain setting of Blue signal (PAL)
00051	00000	00127	00061	00061	Fix	Set the cut-off of the Red signal (NTSC)
00052	00000	00127	00061	00061	Fix	Set the cut-off of the Red signal (PAL)
00053	00000	00127	00061	00061	Fix	Set the cut-off of the Green signal (NTSC)
00054	00000	00127	00061	00061	Fix	Set the cut-off of the Green signal (PAL)
00055	00000	00127	00061	00061	Fix	Set the cut-off of the Blue signal (NTSC)
00056	00000	00127	00061	00061	Fix	Set the cut-off of the Blue signal (PAL)
00057	00000	00001	00001	00001	Fix	ON/OFF change of the gamma revision
00058	00000	00255	00007	00007	Fix	Adjust 1 gamma revision point position of a Red signal
00059	00000	00255	00015	00015	Fix	Adjust 2 gamma revision point position of a Red signal
00060	00000	00255	00023	00023	Fix	Adjust 3 gamma revision point position of a Red signal
00061	00000	00255	00031	00031	Fix	Adjust 4 gamma revision point position of a Red signal
00062	00000	00255	00039	00039	Fix	Adjust 5 gamma revision point position of a Red signal
00063	00000	00255	00047	00047	Fix	Adjust 6 gamma revision point position of a Red signal
00064	00000	00255	00055	00055	Fix	Adjust 7 gamma revision point position of a Red signal
00065	00000	00255	00017	00017	Fix	Appoint gamma revision gain 1 of the Red signal
00066	00000	00255	00031	00031	Fix	Appoint gamma revision gain 2 of the Red signal
00067	00000	00255	00032	00032	Fix	Appoint gamma revision gain 3 of the Red signal
00068	00000	00255	00032	00032	Fix	Appoint gamma revision gain 4 of the Red signal
00069	00000	00255	00036	00036	Fix	Appoint gamma revision gain 5 of the Red signal
00070	00000	00255	00042	00042	Fix	Appoint gamma revision gain 6 of the Red signal
00071	00000	00255	00058	00058	Fix	Appoint gamma revision gain 7 of the Red signal
00072	00000	00255	00088	00088	Fix	Appoint gamma revision gain 8 of the Red signal
00073	00000	00255	00007	00007	Fix	Adjust 1 gamma revision point position of a Green signal
00074	00000	00255	00015	00015	Fix	Adjust 2 gamma revision point position of a Green signal
00075	00000	00255	00023	00023	Fix	Adjust 3 gamma revision point position of a Green signal
00076	00000	00255	00031	00031	Fix	Adjust 4 gamma revision point position of a Green signal
00077	00000	00255	00039	00039	Fix	Adjust 5 gamma revision point position of a Green signal
00078	00000	00255	00047	00047	Fix	Adjust 6 gamma revision point position of a Green signal
00079	00000	00255	00055	00055	Fix	Adjust 7 gamma revision point position of a Green signal
00080	00000	00255	00017	00017	Fix	Appoint gamma revision gain 1 of the Green signal
00081	00000	00255	00031	00031	Fix	Appoint gamma revision gain 2 of the Green signal
00082	00000	00255	00032	00032	Fix	Appoint gamma revision gain 3 of the Green signal
00083	00000	00255	00032	00032	Fix	Appoint gamma revision gain 4 of the Green signal
00084	00000	00255	00036	00036	Fix	Appoint gamma revision gain 5 of the Green signal
00085	00000	00255	00042	00042	Fix	Appoint gamma revision gain 6 of the Green signal
00086	00000	00255	00058	00058	Fix	Appoint gamma revision gain 7 of the Green signal
00087	00000	00255	00088	00088	Fix	Appoint gamma revision gain 8 of the Green signal
00088	00000	00255	00007	00007	Fix	Adjust 1 gamma revision point position of a Blue signal
00089	00000	00255	00015	00015	Fix	Adjust 2 gamma revision point position of a Blue signal
00090	00000	00255	00023	00023	Fix	Adjust 3 gamma revision point position of a Blue signal
00091	00000	00255	00031	00031	Fix	Adjust 4 gamma revision point position of a Blue signal
00092	00000	00255	00039	00039	Fix	Adjust 5 gamma revision point position of a Blue signal
00093	00000	00255	00047	00047	Fix	Adjust 6 gamma revision point position of a Blue signal
00094	00000	00255	00055	00055	Fix	Adjust 7 gamma revision point position of a Blue signal

Indication	Minimum value	Maximum value	Initial value	Reference register value		Detail
00095	00000	00255	00017	00017	Fix	Appoint gamma revision gain 1 of the Blue signal
00096	00000	00255	00031	00031	Fix	Appoint gamma revision gain 2 of the Blue signal
00097	00000	00255	00032	00032	Fix	Appoint gamma revision gain 3 of the Blue signal
00098	00000	00255	00032	00032	Fix	Appoint gamma revision gain 4 of the Blue signal
00099	00000	00255	00036	00036	Fix	Appoint gamma revision gain 5 of the Blue signal
00100	00000	00255	00042	00042	Fix	Appoint gamma revision gain 6 of the Blue signal
00101	00000	00255	00058	00058	Fix	Appoint gamma revision gain 7 of the Blue signal
00102	00000	00255	00088	00088	Fix	Appoint gamma revision gain 8 of the Blue signal
00103	00000	00255	00060	00060	Adjust	Adjust the horizontal indication point of the picture (NTSC)
00104	00000	00255	00060	00060	Adjust	Adjust the horizontal indication point of the picture (PAL)
00105	00000	00255	00010	00010	Adjust	Adjust the vertical indication point of the picture (NTSC)
00106	00000	00255	00010	00010	Adjust	Adjust the vertical indication point of the picture (PAL)
00107	00000	00127	00042	00042	Fix	AD clock gain adjustment (NTSC)
00108	00000	00127	00042	00042	Fix	AD clock gain adjustment (PAL)
00109	00000	00007	00001	00001	Fix	Noise reduction of the Y signal (NTSC)
00110	00000	00007	00001	00001	Fix	Noise reduction of the Y signal (PAL)
00111	00000	00003	00032	00032	Fix	Choose a YC separation filter (NTSC)
00112	00000	00003	00048	00048	Fix	Choose a YC separation filter (PAL)
00113	00000	00007	00000	00000	Fix	Color pulling out filter setting (NTSC)
00114	00000	00007	00000	00000	Fix	Color pulling out filter setting (PAL)
00115	00000	00007	00001	00001	Adjust	Choose com movement mode and color BPF (NTSC)
00116	00000	00007	00004	00004	Adjust	Choose com movement mode and color BPF (PAL)
00117	00000	01023	00180	00180	Fix	Vertical dot cancellation setting (NTSC)
00118	00000	01023	00180	00180	Fix	Vertical dot cancellation setting (PAL)
00119	00000	00063	00001	00001	Adjust	Noise reduction setting (NTSC)
00120	00000	00063	00001	00001	Adjust	Noise reduction setting (PAL)
00121	00000	01023	00338	00338	Fix	Quantity of brightness adjustment setting (NTSC)
00122	00000	01023	00338	00338	Fix	Quantity of brightness adjustment setting (PAL)
00123	00000	00255	00168	00168	Fix	Brightness gain adjustment (NTSC)
00124	00000	00255	00168	00168	Fix	Brightness gain adjustment (PAL)
00125	00000	00511	00140	00140	Adjust	Color signal output level setting (NTSC)
00126	00000	00511	00096	00096	Adjust	Color signal output level setting (PAL)
00127	00000	00006	00004	00004	Fix	ACC movement mode setting
00128	00000	00255	00033	00033	Fix	C signal filter characteristic setting of the Y/C separation part (NTSC)
00129	00000	00255	00033	00033	Fix	C signal filter characteristic setting of the Y/C separation part (PAL)
00130	00000	16383	02464	02464	Fix	Amplitude killer off level setting
00131	00000	16383	02472	02472	Fix	Amplitude killer on level setting
00132	00000	00127	00071	00071	Fix	Clamp DC level adjustment setting
00133	00000	00015	00015	00015	Fix	Clamp speed adjustment setting
00134	00000	00063	00049	00049	Fix	Noise filter band setting of horizontal synchronization signal and vertical synchronizing signal (NTSC)
00135	00000	00063	00049	00049	Fix	Noise filter band setting of horizontal synchronization signal and vertical synchronizing signal (PAL)
00136	00000	65535	14976	14976	Fix	Horizontal phase comparison gain setting (NTSC)
00137	00000	65535	14976	14976	Fix	Horizontal phase comparison gain setting (PAL)
00138	00000	00063	00055	00055	Fix	Horizontal loop filter setting 1
00139	00000	00015	00010	00010	Fix	Horizontal loop filter setting 2
00140	00000	00015	00007	00007	Fix	Horizontal loop filter setting 3
00141	00000	00015	00001	00001	Fix	Synchronization separation burst clock setting (NTSC)
00142	00000	00015	00001	00001	Fix	Synchronization separation burst clock setting (PAL)

Indication	Minimum value	Maximum value	Initial value	Reference register value		Detail
00143	00000	00255	00252	00252	Fix	Free run center value setting of horizontal synchronization signal (NTSC)
00144	00000	00255	00252	00252	Fix	Free run center value setting of horizontal synchronization signal (PAL)
00145	00000	00511	00326	00326	Fix	DOKIDET 01
00146	00000	00511	00082	00082	Fix	DOKIDET 02
00147	00000	00511	00033	00033	Fix	DOKIDET 03
00148	00000	00026	00000	00000	Fix	Unused
00149	00000	00026	00000	00000	Fix	Unused
00150	00000	00255	00128	00128	Fix	Subcareer center frequency setting (NTSC)
00151	00000	00255	00000	00000	Fix	Unused
00152	00000	00255	00128	00128	Fix	Subcareer center frequency setting (PAL)
00153	00000	00255	00000	00000	Fix	Unused
00154	00000	00255	00018	00018	Adjust	Coordinate the delay of the C signal with a Y signal (NTSC)
00155	00000	00255	00023	00023	Adjust	Coordinate the delay of the C signal with a Y signal (PAL)
00156	00000	00255	00105	00098	Adjust	Coordinate the VCOM amplitude of the LCD (NTSC)
00157	00000	00255	00104	00096	Adjust	Coordinate the VCOM amplitude of the LCD (PAL)
00158	00000	00255	00051	00051	Adjust	Coordinate VCOM center value of the LCD (NTSC)
00159	00000	00255	00051	00051	Adjust	Coordinate VCOM center value of the LCD (PAL)
00160	00000	00009	00004	00004	Fix	Set a variable range of the indication VSYNC frequency (NTSC)
00161	00000	00009	00006	00006	Fix	Set a variable range of the indication VSYNC frequency (PAL)
00162	00040	00110	00090	00090	Fix	Set time when indication VSYNC frequency changes (NTSC)
00163	00040	00110	00060	00060	Fix	Set time when indication VSYNC frequency changes (PAL)
00164	00000	00007	00000	00000	Fix	CLAMP MODE (NTSC)
00165	00000	00007	00000	00000	Fix	CLAMP MODE (PAL)

SECTION 5
TROUBLESHOOTING

5.1 16 PIN CORD DIAGRAM (except EU version)

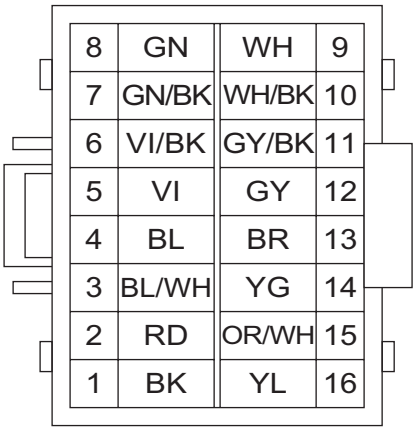

BK	Black	GY	Gray
RD	Red	BR	Brown
BL	Blue	YG	Yellow Green
WH	White	OR	Orange
VI	Violet	YL	Yellow
GN	Green		

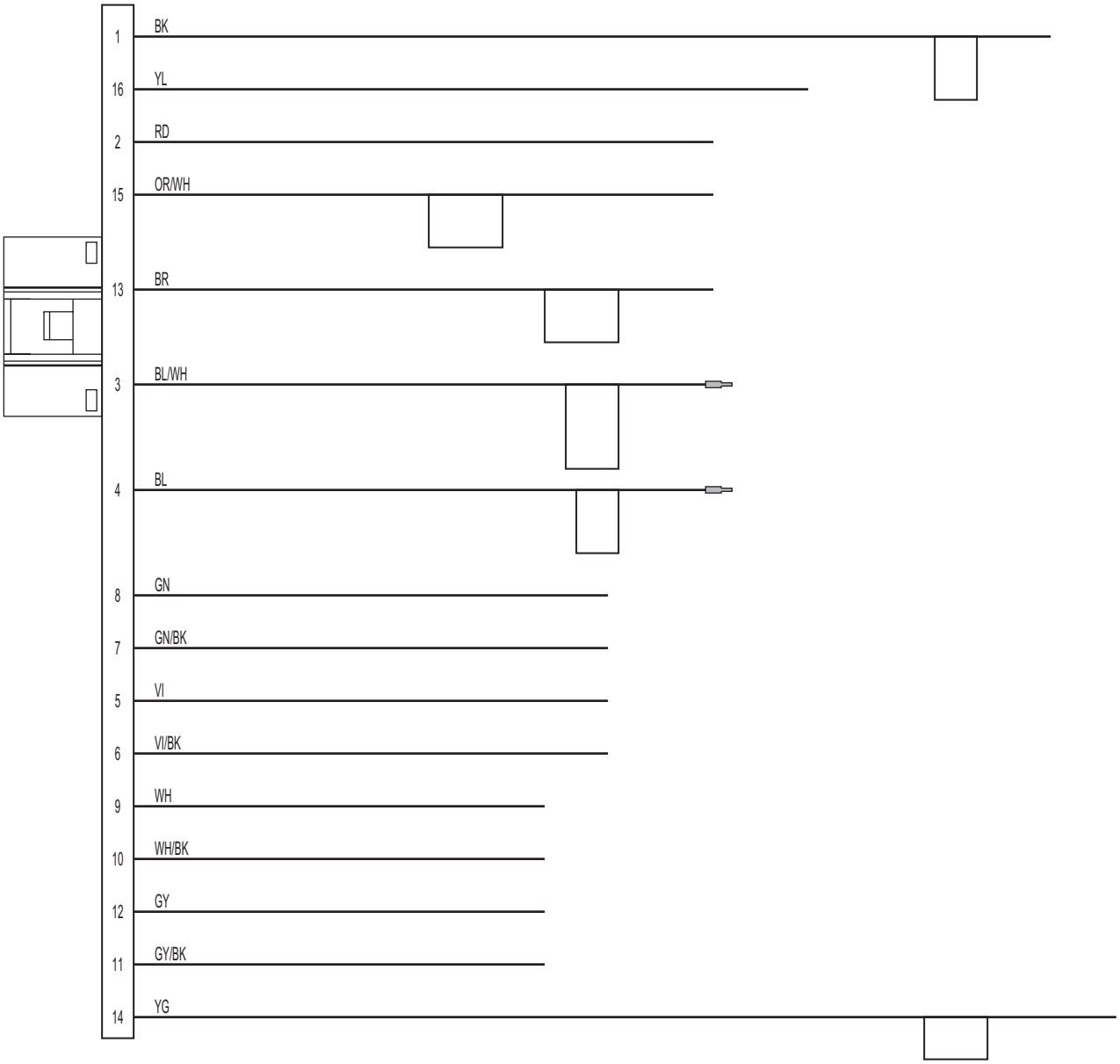

5.2 16 PIN CORD DIAGRAM (for EU version)

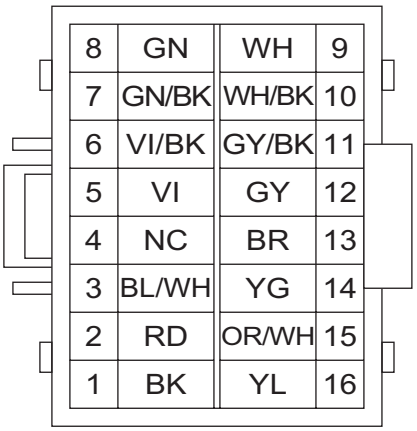

BK	Black	GY	Gray
RD	Red	BR	Brown
BL	Blue	YG	Yellow Green
WH	White	OR	Orange
VI	Violet	YL	Yellow
GN	Green		

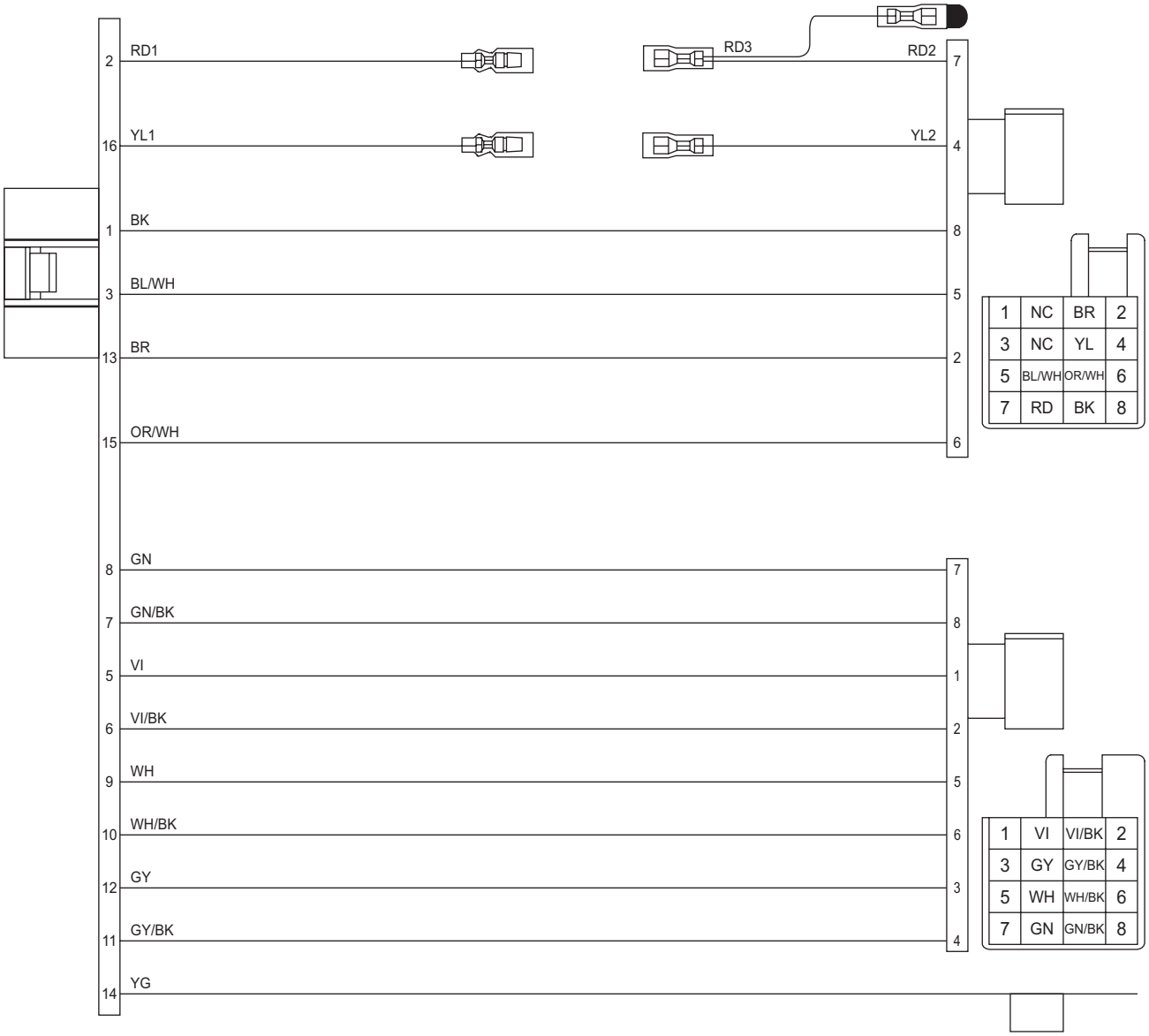

Victor Company of Japan, Limited
Mobile Entertainment Division 10-1,1chome,Ohwatari-machi,Maebashi-city,371-8543,Japan

(No.MA443<Rev.001>)

Printed in Japan
VSE

JVC

REVISION INFORMATION

DVD RECEIVER WITH MONITOR

KW-ADV792J, KW-AVX624UI, KW-AVX625U, KW-AVX625UT, KW-AVX625EU, KW-AVX626U, KW-AVX626UT, KW-AVX626EU, KW-AVX626A, KW-AVX720J, KW-AVX720E, KW-AVX720EE, KW-AVX724UI, KW-AVX725U, KW-AVX725UN, KW-AVX725UT, KW-AVX725EU, KW-AVX726U, KW-AVX726UN, KW-AVX726UT, KW-AVX726EU, KW-AVX726A, KW-AVX728UF

■ OVERVIEW

Supported reduction in cost, and board contents were changed.

■ DETAILS

COVER SECTION

Title	Line	No.MA443<Rev.001>	No.MA443<Rev.002>	Description
Revision		Rev.001	Rev.002	
Issue Date		2009/04	2009/09	

SECTION 2 SPECIFIC SERVICE INSTRUCTIONS

Title	Line	No.MA443<Rev.001>	No.MA443<Rev.002>	Description
2 SPECIFIC SERVICE INSTRUCTIONS	1	This service manual does not describe SPECIFIC SERVICE INSTRUCTIONS.	-	
2.1 Identification method	T	-	2.1 Identification method	
	1	-	Supported reduction in cost, and board contents were changed.A set put the following label on is an object.	
	2	-	ILLUSTRATION(ma443_2001.png)	

STANDARD SCHEMATIC DIAGRAMS

Schematic Diagram

Diagram Name	No.MA443<Rev.001>	No.MA443<Rev.002>	Description
Menu	Main section (Common use)	Oid Main section	
Menu	Sub section (Common use)	Old Sub section	

COPYRIGHT © 2009 Victor Company of Japan, Limited

Diagram Name	No.MA443<Rev.001>	No.MA443<Rev.002>	Description
Menu	Panel section (Common use)	Old Panel section	
Menu	Door section (Common use)	Old Door section	
Menu	KEY section (Common use)	Old KEY section	
Menu	-	Main section (Common use)	
Menu	-	Sub section (Common use)	
Menu	-	Panel section (Common use)	
Menu	-	Door section (Common use)	
Menu	-	KEY section (Common use)	

Printed Circuit Board

Diagram Name	No.MA443<Rev.001>	No.MA443<Rev.002>	Description
Menu	Main board (Common use)	Old Main board	
Menu	Panel board (Common use)	Old Sub board	
Menu	KEY board (Common use)	Old Panel board	
Menu	Sub board (Common use)	Old Door board	
Menu	Door board (Common use)	Old KEY board	
Menu	-	Main board (Common use)	
Menu	-	Sub board (Common use)	
Menu	-	Panel board (Common use)	
Menu	-	Door board (Common use)	
Menu	-	KEY board (Common use)	

Exploded View

Diagram Name	No.MA443<Rev.001>	No.MA443<Rev.002>	Description
Menu	DVD mechanism assembly (Except 624,625,626ver.)	DVD mechanism assembly(Except AVX624/625/626)	
Menu	DVD mechanism assembly (Only 624,625,626ver.)	DVD mechanism assembly(AVX624/625/626)	

Description of Major ICs

Diagram Name	No.MA443<Rev.001>	No.MA443<Rev.002>	Description
Menu	-	IC665: JES1645	
Menu	IC721: JES1611	IC721: JES1612	
Menu	-	IC205: NJM2505AF-X	
Menu	IC665: FSDG3101D023SCS	IC665: VDG1368-D011AWS	
Menu	IC1: TEF6606T/V3-X	IC1: TEF6606T/V5-X	
Menu	-	IC663: TPS2051BD-X	

PARTS LIST

MODEL No. LIST

Model No.	No.MA443<Rev.002>
KW-ADV792J	01
KW-AVX624UI	02
KW-AVX625EU	05
KW-AVX625U	03
KW-AVX625UT	04
KW-AVX626A	09
KW-AVX626EU	08
KW-AVX626U	06

Model No.	No.MA443<Rev.002>
KW-AVX626UT	07
KW-AVX720E	0B
KW-AVX720EE	0C
KW-AVX720J	0A
KW-AVX724UI	0D
KW-AVX725EU	11
KW-AVX725U	0E
KW-AVX725UN	0F

Model No.	No.MA443<Rev.002>
KW-AVX725UT	10
KW-AVX726A	16
KW-AVX726EU	15
KW-AVX726U	12
KW-AVX726UN	13
KW-AVX726UT	14
KW-AVX728UF	17

General assembly [M1MM]

⚠	Symbol		or	Part No. <Rev.001>	Part No. <Rev.002>	Part Name	Description	Qty	Models
	M1MM	138		----------	LV45386-001A	R2 INDICATION	(Addition)	1	01,02,03,04,05,06,07,08,09,0A,0B,0C,0D,0E,0F,10,11,12,13,14,15,16,17

Electrical parts list old Main board [01]

⚠	Symbol		or	Part No. <Rev.001>	Part No. <Rev.002>	Part Name	Description	Qty	Models
⚠	01	IC721		----------	JES1602	IC(PROGRAMED)	(Addition)	1	01,0A,0D,0E,0F,10,12,13,14,16,17
⚠	01	IC721		JES1602	----------	IC(PROGRAMED)	(Deletion)	1	01,0A,0D,0E,10,12,13,14,16,17
⚠	01	IC721		JES1602	----------	IC(PROGRAMED)	(Deletion)	1	0F

old Panel board [02]

⚠	Symbol		or	Part No. <Rev.001>	Part No. <Rev.002>	Part Name	Description	Qty	Models
⚠	02	IC601		----------	JES1651	IC(PROGRAMED)	(Addition)	1	01,02,03,04,05,06,07,08,09,0A,0B,0C,0D,0E,0F,10,11,12,13,14,15,16,17
⚠	02	IC601		JES1651	----------	IC(PROGRAMED)	(Deletion)	1	01,02,03,04,05,06,07,08,09,0A,0B,0C,0D,0E,10,11,12,13,14,15,16,17
⚠	02	IC601		JES1651	----------	IC(PROGRAMED)	(Deletion)	1	0F

Main board [05]

⚠	Symbol		or	Part No. <Rev.001>	Part No. <Rev.002>	Part Name	Description	Qty	Models
⚠	05	IC1		----------	TEF6606T/V5-X	IC	(Addition)	1	01,02,03,04,05,06,07,08,09,0A,0B,0C,0D,0E,0F,10,11,12,13,14,15,16,17
	05	IC71		----------	LC72725KM-X	IC	(Addition)	1	0B,0C,11,15
	05	IC161		----------	TDA7416	IC	(Addition)	1	01,02,03,04,05,06,07,08,09,0A,0B,0C,0D,0E,0F,10,11,12,13,14,15,16,17
	05	IC202		----------	NJM2535V-X	IC	(Addition)	1	01,02,03,04,05,06,07,08,09,0A,0B,0C,0D,0E,0F,10,11,12,13,14,15,16,17
	05	IC203		----------	MM1228XF-X	IC	(Addition)	1	01,02,03,04,05,06,07,08,09,0A,0B,0C,0D,0E,0F,10,11,12,13,14,15,16,17
	05	IC205		----------	NJM2505AF-X	VIDEO IC	(Addition)	1	01,02,03,04,05,06,07,08,09,0A,0B,0C,0D,0E,0F,10,11,12,13,14,15,16,17
	05	IC371		----------	TB2926CHQ	IC	(Addition)	1	01,02,03,04,05,06,07,08,09,0A,0B,0C,0D,0E,0F,10,11,12,13,14,15,16,17
	05	IC591		----------	NJM4565E-X	IC	(Addition)	1	01,02,03,04,05,06,07,08,09,0A,0B,0C,0D,0E,0F,10,11,12,13,14,15,16,17
⚠	05	IC605		----------	BD9781HFP-W	IC	(Addition)	1	01,02,03,04,05,06,07,08,09,0A,0B,0C,0D,0E,0F,10,11,12,13,14,15,16,17
	05	IC606		----------	TC7SET08FU-J-X	IC(DIGITAL)	(Addition)	1	01,02,03,04,05,06,07,08,09,0A,0B,0C,0D,0E,0F,10,11,12,13,14,15,16,17
	05	IC608		----------	TOTX177L	OPT TRANSMITTER	(Addition)	1	01,02,03,04,05,06,07,08,09,0A,0B,0C,0D,0E,0F,10,11,12,13,14,15,16,17
	05	IC663		----------	TPS2051BD-X	IC	(Addition)	1	01,0A,0B,0C,0D,0E,0F,10,11,12,13,14,15,16,17
⚠	05	IC721		----------	JES1604	IC(PROGRAMED)	(Addition)	1	01,0A,0D,0E,0F,10,12,13,14,16,17
⚠	05	IC721		----------	JES1592	IC(PROGRAMED)	(Addition)	1	02,03,04,05,06,07,08,09
⚠	05	IC721		----------	JES1612	IC(PROGRAMED)	(Addition)	1	0B,0C,11,15
	05	IC771		----------	BR24L32F-W-X	IC(DIGITAL)	(Addition)	1	01,02,03,04,05,06,07,08,09,0A,0B,0C,0D,0E,0F,10,11,12,13,14,15,16,17
	05	IC803		----------	74AHCT126PW-X	IC	(Addition)	1	01,02,03,04,05,06,07,08,09,0A,0B,0C,0D,0E,0F,10,11,12,13,14,15,16,17
	05	IC901		----------	R2S25400DS-E	IC	(Addition)	1	01,02,03,04,05,06,07,08,09,0A,0B,0C,0D,0E,0F,10,11,12,13,14,15,16,17
	05	IC912		----------	BH33MA3WHFV-W	IC	(Addition)	1	01,02,03,04,05,06,07,08,09,0A,0B,0C,0D,0E,0F,10,11,12,13,14,15,16,17
⚠	05	IC921		----------	BA9743AFV-X	IC	(Addition)	1	01,02,03,04,05,06,07,08,09,0A,0B,0C,0D,0E,0F,10,11,12,13,14,15,16,17
	05	IC924		----------	TC7SH08FU-X	IC	(Addition)	1	01,02,03,04,05,06,07,08,09,0A,0B,0C,0D,0E,0F,10,11,12,13,14,15,16,17
	05	IC961		----------	BA6956AN	IC	(Addition)	1	01,02,03,04,05,06,07,08,09,0A,0B,0C,0D,0E,0F,10,11,12,13,14,15,16,17
⚠	05	IC971		----------	BA9743AFV-X	IC	(Addition)	1	01,02,03,04,05,06,07,08,09,0A,0B,0C,0D,0E,0F,10,11,12,13,14,15,16,17
	05	IC972		----------	TC7SH08FU-X	IC	(Addition)	1	01,02,03,04,05,06,07,08,09,0A,0B,0C,0D,0E,0F,10,11,12,13,14,15,16,17
	05	Q251		----------	2SD2114K/VW/-X	TRANSISTOR	(Addition)	1	01,0A,0B,0C,0D,0E,0F,10,11,12,13,14,15,16,17
	05	Q303		----------	RT1N441C-X	TRANSISTOR	(Addition)	1	01,02,03,04,05,06,07,08,09,0A,0B,0C,0D,0E,0F,10,11,12,13,14,15,16,17
	05	Q303	or	----------	UN2213-X	DIGI TRANSISTOR	(Addition)	1	01,02,03,04,05,06,07,08,09,0A,0B,0C,0D,0E,0F,10,11,12,13,14,15,16,17
	05	Q341		----------	2SC3928A/QR/-X	TRANSISTOR	(Addition)	1	01,02,03,04,05,06,07,08,09,0A,0B,0C,0D,0E,0F,10,11,12,13,14,15,16,17

⚠	Symbol		or	Part No. <Rev.001>	Part No. <Rev.002>	Part Name	Description	Qty	Models
	05	Q351		----------	2SC3928A/QR/-X	TRANSISTOR	(Addition)	1	01,02,03,04,05,06,07,08,09,0A,0B,0C, 0D,0E,0F,10,11,12,13,14,15,16,17
	05	Q411		----------	RT1N141C-X	DIGI TRANSISTOR	(Addition)	1	01,02,03,04,05,06,07,08,09,0A,0B,0C, 0D,0E,0F,10,11,12,13,14,15,16,17
	05	Q411	or	----------	UN2211-X	TRANSISTOR	(Addition)	1	01,02,03,04,05,06,07,08,09,0A,0B,0C, 0D,0E,0F,10,11,12,13,14,15,16,17
	05	Q421		----------	RT1N141C-X	DIGI TRANSISTOR	(Addition)	1	01,02,03,04,05,06,07,08,09,0A,0B,0C, 0D,0E,0F,10,11,12,13,14,15,16,17
	05	Q421	or	----------	UN2211-X	TRANSISTOR	(Addition)	1	01,02,03,04,05,06,07,08,09,0A,0B,0C, 0D,0E,0F,10,11,12,13,14,15,16,17
	05	Q431		----------	2SD1994A/RS/-T	TRANSISTOR	(Addition)	1	01,02,03,04,05,06,07,08,09,0A,0B,0C, 0D,0E,0F,10,11,12,13,14,15,16,17
	05	Q432		----------	RT1P141C-X	DIGI TRANSISTOR	(Addition)	1	01,02,03,04,05,06,07,08,09,0A,0B,0C, 0D,0E,0F,10,11,12,13,14,15,16,17
	05	Q432	or	----------	UN2111-X	TRANSISTOR	(Addition)	1	01,02,03,04,05,06,07,08,09,0A,0B,0C, 0D,0E,0F,10,11,12,13,14,15,16,17
	05	Q433		----------	RT1N141C-X	DIGI TRANSISTOR	(Addition)	1	01,02,03,04,05,06,07,08,09,0A,0B,0C, 0D,0E,0F,10,11,12,13,14,15,16,17
	05	Q433	or	----------	UN2211-X	TRANSISTOR	(Addition)	1	01,02,03,04,05,06,07,08,09,0A,0B,0C, 0D,0E,0F,10,11,12,13,14,15,16,17
	05	Q441		----------	RSQ025P03-W	TRANSISTOR	(Addition)	1	01,02,03,04,05,06,07,08,09,0A,0B,0C, 0D,0E,0F,10,11,12,13,14,15,16,17
	05	Q442		----------	RT1N141C-X	DIGI TRANSISTOR	(Addition)	1	01,02,03,04,05,06,07,08,09,0A,0B,0C, 0D,0E,0F,10,11,12,13,14,15,16,17
	05	Q442	or	----------	UN2211-X	TRANSISTOR	(Addition)	1	01,02,03,04,05,06,07,08,09,0A,0B,0C, 0D,0E,0F,10,11,12,13,14,15,16,17
	05	Q781		----------	UN211L-X	TRANSISTOR	(Addition)	1	01,02,03,04,05,06,07,08,09,0A,0B,0C, 0D,0E,0F,10,11,12,13,14,15,16,17
	05	Q782		----------	RT1P141C-X	DIGI TRANSISTOR	(Addition)	1	01,02,03,04,05,06,07,08,09,0A,0B,0C, 0D,0E,0F,10,11,12,13,14,15,16,17
	05	Q782	or	----------	UN2111-X	TRANSISTOR	(Addition)	1	01,02,03,04,05,06,07,08,09,0A,0B,0C, 0D,0E,0F,10,11,12,13,14,15,16,17
	05	Q783		----------	RT1P141C-X	DIGI TRANSISTOR	(Addition)	1	01,0A,0B,0C,0D,0E,0F,10,11,12,13,14, 15,16,17
	05	Q783	or	----------	UN2111-X	TRANSISTOR	(Addition)	1	01,0A,0B,0C,0D,0E,0F,10,11,12,13,14, 15,16,17
	05	Q784		----------	2SC3928A/QR/-X	TRANSISTOR	(Addition)	1	01,02,03,04,05,06,07,08,09,0A,0B,0C, 0D,0E,0F,10,11,12,13,14,15,16,17
	05	Q841		----------	RT1N141C-X	DIGI TRANSISTOR	(Addition)	1	01,02,03,04,05,06,07,08,09,0A,0B,0C, 0D,0E,0F,10,11,12,13,14,15,16,17
	05	Q841	or	----------	UN2211-X	TRANSISTOR	(Addition)	1	01,02,03,04,05,06,07,08,09,0A,0B,0C, 0D,0E,0F,10,11,12,13,14,15,16,17
	05	Q881		----------	2SC3928A/QR/-X	TRANSISTOR	(Addition)	1	01,02,03,04,05,06,07,08,09,0A,0B,0C, 0D,0E,0F,10,11,12,13,14,15,16,17
	05	Q881	or	----------	2SC1623A/5-6/-X	TRANSISTOR	(Addition)	1	01,02,03,04,05,06,07,08,09,0A,0B,0C, 0D,0E,0F,10,11,12,13,14,15,16,17
	05	Q891		----------	RT1N141C-X	DIGI TRANSISTOR	(Addition)	1	01,02,03,04,05,06,07,08,09,0A,0B,0C, 0D,0E,0F,10,11,12,13,14,15,16,17
	05	Q891	or	----------	UN2211-X	TRANSISTOR	(Addition)	1	01,02,03,04,05,06,07,08,09,0A,0B,0C, 0D,0E,0F,10,11,12,13,14,15,16,17
	05	Q911		----------	RSQ025P03-W	TRANSISTOR	(Addition)	1	01,02,03,04,05,06,07,08,09,0A,0B,0C, 0D,0E,0F,10,11,12,13,14,15,16,17
	05	Q912		----------	RT1N141C-X	DIGI TRANSISTOR	(Addition)	1	01,02,03,04,05,06,07,08,09,0A,0B,0C, 0D,0E,0F,10,11,12,13,14,15,16,17
	05	Q912	or	----------	UN2211-X	TRANSISTOR	(Addition)	1	01,02,03,04,05,06,07,08,09,0A,0B,0C, 0D,0E,0F,10,11,12,13,14,15,16,17
	05	Q922		----------	2SC3928A/QR/-X	TRANSISTOR	(Addition)	1	01,02,03,04,05,06,07,08,09,0A,0B,0C, 0D,0E,0F,10,11,12,13,14,15,16,17
	05	Q923		----------	ISA1530AC1/QR/X	TRANSISTOR	(Addition)	1	01,02,03,04,05,06,07,08,09,0A,0B,0C, 0D,0E,0F,10,11,12,13,14,15,16,17
	05	Q924		----------	2SC3928A/QR/-X	TRANSISTOR	(Addition)	1	01,02,03,04,05,06,07,08,09,0A,0B,0C, 0D,0E,0F,10,11,12,13,14,15,16,17
	05	Q925		----------	ISA1530AC1/QR/X	TRANSISTOR	(Addition)	1	01,02,03,04,05,06,07,08,09,0A,0B,0C, 0D,0E,0F,10,11,12,13,14,15,16,17
	05	Q926		----------	RSQ030P03-W	MOS FET	(Addition)	1	01,02,03,04,05,06,07,08,09,0A,0B,0C, 0D,0E,0F,10,11,12,13,14,15,16,17
	05	Q927		----------	RSQ030P03-W	MOS FET	(Addition)	1	01,02,03,04,05,06,07,08,09,0A,0B,0C, 0D,0E,0F,10,11,12,13,14,15,16,17
	05	Q951		----------	RT1P441C-X	DIGI TRANSISTOR	(Addition)	1	01,02,03,04,05,06,07,08,09,0A,0B,0C, 0D,0E,0F,10,11,12,13,14,15,16,17

⚠	Symbol		or	Part No. <Rev.001>	Part No. <Rev.002>	Part Name	Description	Qty	Models
	05	Q951	or	----------	UN2113-X	TRANSISTOR	(Addition)	1	01,02,03,04,05,06,07,08,09,0A,0B,0C, 0D,0E,0F,10,11,12,13,14,15,16,17
	05	Q952		----------	RT1N441C-X	TRANSISTOR	(Addition)	1	01,02,03,04,05,06,07,08,09,0A,0B,0C, 0D,0E,0F,10,11,12,13,14,15,16,17
	05	Q952	or	----------	UN2213-X	DIGI TRANSISTOR	(Addition)	1	01,02,03,04,05,06,07,08,09,0A,0B,0C, 0D,0E,0F,10,11,12,13,14,15,16,17
	05	Q961		----------	RT1P441C-X	DIGI TRANSISTOR	(Addition)	1	01,02,03,04,05,06,07,08,09,0A,0B,0C, 0D,0E,0F,10,11,12,13,14,15,16,17
	05	Q961	or	----------	UN2113-X	TRANSISTOR	(Addition)	1	01,02,03,04,05,06,07,08,09,0A,0B,0C, 0D,0E,0F,10,11,12,13,14,15,16,17
	05	Q962		----------	RT1N441C-X	TRANSISTOR	(Addition)	1	01,02,03,04,05,06,07,08,09,0A,0B,0C, 0D,0E,0F,10,11,12,13,14,15,16,17
	05	Q962	or	----------	UN2213-X	DIGI TRANSISTOR	(Addition)	1	01,02,03,04,05,06,07,08,09,0A,0B,0C, 0D,0E,0F,10,11,12,13,14,15,16,17
	05	Q963		----------	RT1N141C-X	DIGI TRANSISTOR	(Addition)	1	01,02,03,04,05,06,07,08,09,0A,0B,0C, 0D,0E,0F,10,11,12,13,14,15,16,17
	05	Q963	or	----------	UN2211-X	TRANSISTOR	(Addition)	1	01,02,03,04,05,06,07,08,09,0A,0B,0C, 0D,0E,0F,10,11,12,13,14,15,16,17
	05	Q973		----------	RTQ035N03-W	MOS FET	(Addition)	1	01,02,03,04,05,06,07,08,09,0A,0B,0C, 0D,0E,0F,10,11,12,13,14,15,16,17
	05	Q976		----------	RT1N441C-X	TRANSISTOR	(Addition)	1	01,02,03,04,05,06,07,08,09,0A,0B,0C, 0D,0E,0F,10,11,12,13,14,15,16,17
	05	Q976	or	----------	UN2213-X	DIGI TRANSISTOR	(Addition)	1	01,02,03,04,05,06,07,08,09,0A,0B,0C, 0D,0E,0F,10,11,12,13,14,15,16,17
	05	Q977		----------	ISA1530AC1/QR/X	TRANSISTOR	(Addition)	1	01,02,03,04,05,06,07,08,09,0A,0B,0C, 0D,0E,0F,10,11,12,13,14,15,16,17
	05	Q977	or	----------	2SA812A/5-6/-X	TRANSISTOR	(Addition)	1	01,02,03,04,05,06,07,08,09,0A,0B,0C, 0D,0E,0F,10,11,12,13,14,15,16,17
	05	Q981		----------	ISA1530AC1/QR/X	TRANSISTOR	(Addition)	1	01,02,03,04,05,06,07,08,09,0A,0B,0C, 0D,0E,0F,10,11,12,13,14,15,16,17
	05	Q982		----------	2SC3928A/QR/-X	TRANSISTOR	(Addition)	1	01,02,03,04,05,06,07,08,09,0A,0B,0C, 0D,0E,0F,10,11,12,13,14,15,16,17
	05	Q991		----------	ISA1530AC1/QR/X	TRANSISTOR	(Addition)	1	01,02,03,04,05,06,07,08,09,0A,0B,0C, 0D,0E,0F,10,11,12,13,14,15,16,17
	05	Q991	or	----------	2SA812A/5-6/-X	TRANSISTOR	(Addition)	1	01,02,03,04,05,06,07,08,09,0A,0B,0C, 0D,0E,0F,10,11,12,13,14,15,16,17
	05	Q1107		----------	2SC3928A/QR/-X	TRANSISTOR	(Addition)	1	01,02,03,04,05,06,07,08,09,0A,0B,0C, 0D,0E,0F,10,11,12,13,14,15,16,17
	05	Q1107	or	----------	2SC1623A/5-6/-X	TRANSISTOR	(Addition)	1	01,02,03,04,05,06,07,08,09,0A,0B,0C, 0D,0E,0F,10,11,12,13,14,15,16,17
	05	Q8012		----------	2SC3928A/QR/-X	TRANSISTOR	(Addition)	1	01,02,03,04,05,06,07,08,09,0A,0B,0C, 0D,0E,0F,10,11,12,13,14,15,16,17
	05	Q8012	or	----------	2SC1623A/5-6/-X	TRANSISTOR	(Addition)	1	01,02,03,04,05,06,07,08,09,0A,0B,0C, 0D,0E,0F,10,11,12,13,14,15,16,17
	05	D141		----------	UDZW6.2B-X	Z DIODE	(Addition)	1	01,02,03,04,05,06,07,08,09,0A,0B,0C, 0D,0E,0F,10,11,12,13,14,15,16,17
	05	D141	or	----------	MA8062/M/-X	Z DIODE	(Addition)	1	01,02,03,04,05,06,07,08,09,0A,0B,0C, 0D,0E,0F,10,11,12,13,14,15,16,17
	05	D142		----------	UDZW6.2B-X	Z DIODE	(Addition)	1	01,02,03,04,05,06,07,08,09,0A,0B,0C, 0D,0E,0F,10,11,12,13,14,15,16,17
	05	D142	or	----------	MA8062/M/-X	Z DIODE	(Addition)	1	01,02,03,04,05,06,07,08,09,0A,0B,0C, 0D,0E,0F,10,11,12,13,14,15,16,17
	05	D151		----------	UDZW6.2B-X	Z DIODE	(Addition)	1	01,02,03,04,05,06,07,08,09,0A,0B,0C, 0D,0E,0F,10,11,12,13,14,15,16,17
	05	D151	or	----------	MA8062/M/-X	Z DIODE	(Addition)	1	01,02,03,04,05,06,07,08,09,0A,0B,0C, 0D,0E,0F,10,11,12,13,14,15,16,17
	05	D152		----------	UDZW6.2B-X	Z DIODE	(Addition)	1	01,02,03,04,05,06,07,08,09,0A,0B,0C, 0D,0E,0F,10,11,12,13,14,15,16,17
	05	D152	or	----------	MA8062/M/-X	Z DIODE	(Addition)	1	01,02,03,04,05,06,07,08,09,0A,0B,0C, 0D,0E,0F,10,11,12,13,14,15,16,17
	05	D203		----------	1SS355W-X	DIODE	(Addition)	1	01,02,03,04,05,06,07,08,09,0A,0B,0C, 0D,0E,0F,10,11,12,13,14,15,16,17
	05	D203	or	----------	MA111-X	SI DIODE	(Addition)	1	01,02,03,04,05,06,07,08,09,0A,0B,0C, 0D,0E,0F,10,11,12,13,14,15,16,17
	05	D204		----------	1SS355W-X	DIODE	(Addition)	1	01,02,03,04,05,06,07,08,09,0A,0B,0C, 0D,0E,0F,10,11,12,13,14,15,16,17
	05	D204	or	----------	MA111-X	SI DIODE	(Addition)	1	01,02,03,04,05,06,07,08,09,0A,0B,0C, 0D,0E,0F,10,11,12,13,14,15,16,17
	05	D205		----------	1SS355W-X	DIODE	(Addition)	1	01,02,03,04,05,06,07,08,09,0A,0B,0C, 0D,0E,0F,10,11,12,13,14,15,16,17

⚠	Symbol		or	Part No. <Rev.001>	Part No. <Rev.002>	Part Name	Description	Qty	Models
	05	D205	or	----------	MA111-X	SI DIODE	(Addition)	1	01,02,03,04,05,06,07,08,09,0A,0B,0C,0D,0E,0F,10,11,12,13,14,15,16,17
	05	D206		----------	1SS355W-X	DIODE	(Addition)	1	01,02,03,04,05,06,07,08,09,0A,0B,0C,0D,0E,0F,10,11,12,13,14,15,16,17
	05	D206	or	----------	MA111-X	SI DIODE	(Addition)	1	01,02,03,04,05,06,07,08,09,0A,0B,0C,0D,0E,0F,10,11,12,13,14,15,16,17
	05	D251		----------	1SS355W-X	DIODE	(Addition)	1	01,0A,0B,0C,0D,0E,0F,10,11,12,13,14,15,16,17
	05	D251	or	----------	MA111-X	SI DIODE	(Addition)	1	01,0A,0B,0C,0D,0E,0F,10,11,12,13,14,15,16,17
	05	D344		----------	MC2836-X	DIODE	(Addition)	1	01,02,03,04,05,06,07,08,09,0A,0B,0C,0D,0E,0F,10,11,12,13,14,15,16,17
	05	D344	or	----------	MA152WA-X	DIODE	(Addition)	1	01,02,03,04,05,06,07,08,09,0A,0B,0C,0D,0E,0F,10,11,12,13,14,15,16,17
	05	D401		----------	MA8047/M/-X	Z DIODE	(Addition)	1	01,02,03,04,05,06,07,08,09,0A,0B,0C,0D,0E,0F,10,11,12,13,14,15,16,17
	05	D401	or	----------	UDZW4.7B-X	Z DIODE	(Addition)	1	01,02,03,04,05,06,07,08,09,0A,0B,0C,0D,0E,0F,10,11,12,13,14,15,16,17
	05	D421		----------	1SS355W-X	DIODE	(Addition)	1	01,02,03,04,05,06,07,08,09,0A,0B,0C,0D,0E,0F,10,11,12,13,14,15,16,17
	05	D421	or	----------	MA111-X	SI DIODE	(Addition)	1	01,02,03,04,05,06,07,08,09,0A,0B,0C,0D,0E,0F,10,11,12,13,14,15,16,17
	05	D431		----------	MA8120/M/-X	Z DIODE	(Addition)	1	01,02,03,04,05,06,07,08,09,0A,0B,0C,0D,0E,0F,10,11,12,13,14,15,16,17
	05	D431	or	----------	UDZW12B-X	Z DIODE	(Addition)	1	01,02,03,04,05,06,07,08,09,0A,0B,0C,0D,0E,0F,10,11,12,13,14,15,16,17
	05	D701		----------	MA111-X	SI DIODE	(Addition)	1	01,02,03,04,05,06,07,08,09,0A,0B,0C,0D,0E,0F,10,11,12,13,14,15,16,17
	05	D701	or	----------	1SS355W-X	DIODE	(Addition)	1	01,02,03,04,05,06,07,08,09,0A,0B,0C,0D,0E,0F,10,11,12,13,14,15,16,17
	05	D702		----------	MC2838-X	DIODE	(Addition)	1	01,02,03,04,05,06,07,08,09,0A,0B,0C,0D,0E,0F,10,11,12,13,14,15,16,17
	05	D702	or	----------	MA152WK-X	SI DIODE	(Addition)	1	01,02,03,04,05,06,07,08,09,0A,0B,0C,0D,0E,0F,10,11,12,13,14,15,16,17
	05	D781		----------	1SS355W-X	DIODE	(Addition)	1	01,02,03,04,05,06,07,08,09,0A,0B,0C,0D,0E,0F,10,11,12,13,14,15,16,17
	05	D781	or	----------	MA111-X	SI DIODE	(Addition)	1	01,02,03,04,05,06,07,08,09,0A,0B,0C,0D,0E,0F,10,11,12,13,14,15,16,17
	05	D782		----------	MC2836-X	DIODE	(Addition)	1	01,02,03,04,05,06,07,08,09,0A,0B,0C,0D,0E,0F,10,11,12,13,14,15,16,17
	05	D782	or	----------	MA152WA-X	DIODE	(Addition)	1	01,02,03,04,05,06,07,08,09,0A,0B,0C,0D,0E,0F,10,11,12,13,14,15,16,17
	05	D783		----------	1SS355W-X	DIODE	(Addition)	1	01,0A,0B,0C,0D,0E,0F,10,11,12,13,14,15,16,17
	05	D783	or	----------	MA111-X	SI DIODE	(Addition)	1	01,0A,0B,0C,0D,0E,0F,10,11,12,13,14,15,16,17
	05	D784		----------	UDZW11B-X	Z DIODE	(Addition)	1	01,02,03,04,05,06,07,08,09,0A,0B,0C,0D,0E,0F,10,11,12,13,14,15,16,17
	05	D784	or	----------	MA8110/M/-X	Z DIODE	(Addition)	1	01,02,03,04,05,06,07,08,09,0A,0B,0C,0D,0E,0F,10,11,12,13,14,15,16,17
	05	D785		----------	1SS355W-X	DIODE	(Addition)	1	01,02,03,04,05,06,07,08,09,0A,0B,0C,0D,0E,0F,10,11,12,13,14,15,16,17
	05	D785	or	----------	MA111-X	SI DIODE	(Addition)	1	01,02,03,04,05,06,07,08,09,0A,0B,0C,0D,0E,0F,10,11,12,13,14,15,16,17
	05	D801		----------	MA22D23-X	SB DIODE	(Addition)	1	01,02,03,04,05,06,07,08,09,0A,0B,0C,0D,0E,0F,10,11,12,13,14,15,16,17
	05	D801	or	----------	RB160M-30-X	SB DIODE	(Addition)	1	01,02,03,04,05,06,07,08,09,0A,0B,0C,0D,0E,0F,10,11,12,13,14,15,16,17
	05	D851		----------	MA22D23-X	SB DIODE	(Addition)	1	01,02,03,04,06,07,09,0A,0D,0E,0F,10,12,13,14,16,17
	05	D851	or	----------	RB160M-30-X	SB DIODE	(Addition)	1	01,02,03,04,06,07,09,0A,0D,0E,0F,10,12,13,14,16,17
	05	D852		----------	MA22D23-X	SB DIODE	(Addition)	1	01,02,03,04,06,07,09,0A,0D,0E,0F,10,12,13,14,16,17
	05	D852	or	----------	RB160M-30-X	SB DIODE	(Addition)	1	01,02,03,04,06,07,09,0A,0D,0E,0F,10,12,13,14,16,17
	05	D891		----------	MC2836-X	DIODE	(Addition)	1	01,02,03,04,05,06,07,08,09,0A,0B,0C,0D,0E,0F,10,11,12,13,14,15,16,17
	05	D891	or	----------	MA152WA-X	DIODE	(Addition)	1	01,02,03,04,05,06,07,08,09,0A,0B,0C,0D,0E,0F,10,11,12,13,14,15,16,17

⚠	Symbol		or	Part No. <Rev.001>	Part No. <Rev.002>	Part Name	Description	Qty	Models
⚠	05	D901		----------	1N5401-F64	SI DIODE	(Addition)	1	01,02,03,04,05,06,07,08,09,0A,0B,0C,0D,0E,0F,10,11,12,13,14,15,16,17
	05	D901	or	----------	1N5401-TU-15	SI DIODE	(Addition)	1	01,02,03,04,05,06,07,08,09,0A,0B,0C,0D,0E,0F,10,11,12,13,14,15,16,17
	05	D906		----------	MA22D23-X	SB DIODE	(Addition)	1	01,02,03,04,05,06,07,08,09,0A,0B,0C,0D,0E,0F,10,11,12,13,14,15,16,17
	05	D906	or	----------	RB160M-30-X	SB DIODE	(Addition)	1	01,02,03,04,05,06,07,08,09,0A,0B,0C,0D,0E,0F,10,11,12,13,14,15,16,17
	05	D921		----------	MA22D23-X	SB DIODE	(Addition)	1	01,02,03,04,05,06,07,08,09,0A,0B,0C,0D,0E,0F,10,11,12,13,14,15,16,17
	05	D922		----------	MA22D23-X	SB DIODE	(Addition)	1	01,02,03,04,05,06,07,08,09,0A,0B,0C,0D,0E,0F,10,11,12,13,14,15,16,17
	05	D951		----------	1SS355W-X	DIODE	(Addition)	1	01,02,03,04,05,06,07,08,09,0A,0B,0C,0D,0E,0F,10,11,12,13,14,15,16,17
	05	D951	or	----------	MA111-X	SI DIODE	(Addition)	1	01,02,03,04,05,06,07,08,09,0A,0B,0C,0D,0E,0F,10,11,12,13,14,15,16,17
	05	D961		----------	MA8056/M/-X	Z DIODE	(Addition)	1	01,02,03,04,05,06,07,08,09,0A,0B,0C,0D,0E,0F,10,11,12,13,14,15,16,17
	05	D961	or	----------	UDZW5.6B-X	Z DIODE	(Addition)	1	01,02,03,04,05,06,07,08,09,0A,0B,0C,0D,0E,0F,10,11,12,13,14,15,16,17
	05	D962		----------	MA22D23-X	SB DIODE	(Addition)	1	01,02,03,04,05,06,07,08,09,0A,0B,0C,0D,0E,0F,10,11,12,13,14,15,16,17
	05	D962	or	----------	RB160M-30-X	SB DIODE	(Addition)	1	01,02,03,04,05,06,07,08,09,0A,0B,0C,0D,0E,0F,10,11,12,13,14,15,16,17
	05	D971		----------	MA22D23-X	SB DIODE	(Addition)	1	01,0A,0B,0C,0D,0E,0F,10,11,12,13,14,15,16,17
	05	D971		----------	RB051L-40-X	SB DIODE	(Addition)	1	02,03,04,05,06,07,08,09
	05	D972		----------	MA22D23-X	SB DIODE	(Addition)	1	01,02,03,04,05,06,07,08,09,0A,0B,0C,0D,0E,0F,10,11,12,13,14,15,16,17
	05	D972	or	----------	RB160M-30-X	SB DIODE	(Addition)	1	01,02,03,04,05,06,07,08,09,0A,0B,0C,0D,0E,0F,10,11,12,13,14,15,16,17
	05	D973		----------	MA22D23-X	SB DIODE	(Addition)	1	01,02,03,04,05,06,07,08,09,0A,0B,0C,0D,0E,0F,10,11,12,13,14,15,16,17
	05	D973	or	----------	RB160M-30-X	SB DIODE	(Addition)	1	01,02,03,04,05,06,07,08,09,0A,0B,0C,0D,0E,0F,10,11,12,13,14,15,16,17
	05	D974		----------	MA8120/M/-X	Z DIODE	(Addition)	1	01,02,03,04,05,06,07,08,09,0A,0B,0C,0D,0E,0F,10,11,12,13,14,15,16,17
	05	D974	or	----------	UDZW12B-X	Z DIODE	(Addition)	1	01,02,03,04,05,06,07,08,09,0A,0B,0C,0D,0E,0F,10,11,12,13,14,15,16,17
	05	D975		----------	1SS355W-X	DIODE	(Addition)	1	01,02,03,04,05,06,07,08,09,0A,0B,0C,0D,0E,0F,10,11,12,13,14,15,16,17
	05	D975	or	----------	MA111-X	SI DIODE	(Addition)	1	01,02,03,04,05,06,07,08,09,0A,0B,0C,0D,0E,0F,10,11,12,13,14,15,16,17
	05	D994		----------	MA22D23-X	SB DIODE	(Addition)	1	01,02,03,04,05,06,07,08,09,0A,0B,0C,0D,0E,0F,10,11,12,13,14,15,16,17
	05	D994	or	----------	RB160M-30-X	SB DIODE	(Addition)	1	01,02,03,04,05,06,07,08,09,0A,0B,0C,0D,0E,0F,10,11,12,13,14,15,16,17
	05	D1003		----------	LHQ974/LM/-X	LED	(Addition)	1	01,02,03,04,05,06,07,08,09,0A,0B,0C,0D,0E,0F,10,11,12,13,14,15,16,17
	05	D1004		----------	LHQ974/LM/-X	LED	(Addition)	1	01,02,03,04,05,06,07,08,09,0A,0B,0C,0D,0E,0F,10,11,12,13,14,15,16,17
	05	D1006		----------	UDZS9.1B-X	Z DIODE	(Addition)	1	01,02,03,04,05,06,07,08,09,0A,0B,0C,0D,0E,0F,10,11,12,13,14,15,16,17
	05	D1103		----------	RB051L-40-X	SB DIODE	(Addition)	1	01,02,03,04,05,06,07,08,09,0A,0B,0C,0D,0E,0F,10,11,12,13,14,15,16,17
	05	D1105		----------	RB051L-40-X	SB DIODE	(Addition)	1	01,02,03,04,05,06,07,08,09,0A,0B,0C,0D,0E,0F,10,11,12,13,14,15,16,17
	05	D1106		----------	RB051L-40-X	SB DIODE	(Addition)	1	01,02,03,04,05,06,07,08,09,0A,0B,0C,0D,0E,0F,10,11,12,13,14,15,16,17
	05	D1661		----------	UDZW5.1B-X	SB DIODE	(Addition)	1	01,0A,0B,0C,0D,0E,0F,10,11,12,13,14,15,16,17
	05	D1661	or	----------	MA8051/M/-X	Z DIODE	(Addition)	1	01,0A,0B,0C,0D,0E,0F,10,11,12,13,14,15,16,17
	05	D1662		----------	UDZW5.1B-X	SB DIODE	(Addition)	1	01,0A,0B,0C,0D,0E,0F,10,11,12,13,14,15,16,17
	05	D1662	or	----------	MA8051/M/-X	Z DIODE	(Addition)	1	01,0A,0B,0C,0D,0E,0F,10,11,12,13,14,15,16,17
	05	C1		----------	NDC31HJ-150X	C CAPACITOR	(Addition)	1	01,02,03,04,05,06,07,08,09,0A,0B,0C,0D,0E,0F,10,11,12,13,14,15,16,17
	05	C2		----------	NDC31HJ-220X	C CAPACITOR	(Addition)	1	01,02,03,04,05,06,07,08,09,0A,0B,0C,0D,0E,0F,10,11,12,13,14,15,16,17

⚠	Symbol		or	Part No. <Rev.001>	Part No. <Rev.002>	Part Name	Description	Qty	Models
	05	C3		----------	NCB31HK-102X	C CAPACITOR	(Addition)	1	01,02,03,04,05,06,07,08,09,0A,0B,0C,0D,0E,0F,10,11,12,13,14,15,16,17
	05	C4		----------	NDC31HJ-7R0X	C CAPACITOR	(Addition)	1	01,02,03,04,05,06,07,08,09,0A,0B,0C,0D,0E,0F,10,11,12,13,14,15,16,17
	05	C7		----------	NCB31HK-102X	C CAPACITOR	(Addition)	1	01,02,03,04,05,06,07,08,09,0A,0B,0C,0D,0E,0F,10,11,12,13,14,15,16,17
	05	C8		----------	NCB31CK-224X	C CAPACITOR	(Addition)	1	01,02,03,04,05,06,07,08,09,0A,0B,0C,0D,0E,0F,10,11,12,13,14,15,16,17
	05	C9		----------	NCB31HK-103X	C CAPACITOR	(Addition)	1	01,02,03,04,05,06,07,08,09,0A,0B,0C,0D,0E,0F,10,11,12,13,14,15,16,17
	05	C13		----------	NCB31CK-224X	C CAPACITOR	(Addition)	1	01,02,03,04,05,06,07,08,09,0A,0B,0C,0D,0E,0F,10,11,12,13,14,15,16,17
	05	C14		----------	NCB31EK-104X	C CAPACITOR	(Addition)	1	01,02,03,04,05,06,07,08,09,0A,0B,0C,0D,0E,0F,10,11,12,13,14,15,16,17
	05	C15		----------	NDC31HJ-150X	C CAPACITOR	(Addition)	1	01,02,03,04,05,06,07,08,09,0A,0B,0C,0D,0E,0F,10,11,12,13,14,15,16,17
	05	C16		----------	NCB31CK-105X	C CAPACITOR	(Addition)	1	01,02,03,04,05,06,07,08,09,0A,0B,0C,0D,0E,0F,10,11,12,13,14,15,16,17
	05	C17		----------	NCB31HK-103X	C CAPACITOR	(Addition)	1	01,02,03,04,05,06,07,08,09,0A,0B,0C,0D,0E,0F,10,11,12,13,14,15,16,17
	05	C18		----------	NCB31HK-103X	C CAPACITOR	(Addition)	1	01,02,03,04,05,06,07,08,09,0A,0B,0C,0D,0E,0F,10,11,12,13,14,15,16,17
	05	C19		----------	NCB31EK-104X	C CAPACITOR	(Addition)	1	01,02,03,04,05,06,07,08,09,0A,0B,0C,0D,0E,0F,10,11,12,13,14,15,16,17
	05	C20		----------	NCB31HK-103X	C CAPACITOR	(Addition)	1	01,02,03,04,05,06,07,08,09,0A,0B,0C,0D,0E,0F,10,11,12,13,14,15,16,17
	05	C21		----------	NCB31HK-103X	C CAPACITOR	(Addition)	1	01,02,03,04,05,06,07,08,09,0A,0B,0C,0D,0E,0F,10,11,12,13,14,15,16,17
	05	C22		----------	NCB31EK-104X	C CAPACITOR	(Addition)	1	01,02,03,04,05,06,07,08,09,0A,0B,0C,0D,0E,0F,10,11,12,13,14,15,16,17
	05	C23		----------	NCB31CK-105X	C CAPACITOR	(Addition)	1	01,02,03,04,05,06,07,08,09,0A,0B,0C,0D,0E,0F,10,11,12,13,14,15,16,17
	05	C24		----------	NCB31EK-104X	C CAPACITOR	(Addition)	1	01,02,03,04,05,06,07,08,09,0A,0B,0C,0D,0E,0F,10,11,12,13,14,15,16,17
	05	C29		----------	NCB31AK-105X	C CAPACITOR	(Addition)	1	01,02,03,04,05,06,07,08,09,0A,0B,0C,0D,0E,0F,10,11,12,13,14,15,16,17
	05	C71		----------	NCB31CK-224X	C CAPACITOR	(Addition)	1	0B,0C,11,15
	05	C72		----------	NDC31HJ-561X	C CAPACITOR	(Addition)	1	0B,0C,11,15
	05	C73		----------	NCB31HK-103X	C CAPACITOR	(Addition)	1	0B,0C,11,15
	05	C74		----------	NCJ21CK-106X-R	C CAPACITOR	(Addition)	1	0B,0C,11,15
	05	C75		----------	NCB31HK-103X	C CAPACITOR	(Addition)	1	0B,0C,11,15
	05	C76		----------	QETN1HM-226Z	E CAPACITOR	(Addition)	1	0B,0C,11,15
	05	C77		----------	NDC31HJ-330X	C CAPACITOR	(Addition)	1	0B,0C,11,15
	05	C78		----------	NDC31HJ-330X	C CAPACITOR	(Addition)	1	0B,0C,11,15
	05	C143		----------	NDC31HJ-471X	C CAPACITOR	(Addition)	1	01,02,03,04,05,06,07,08,09,0A,0B,0C,0D,0E,0F,10,11,12,13,14,15,16,17
	05	C153		----------	NDC31HJ-471X	C CAPACITOR	(Addition)	1	01,02,03,04,05,06,07,08,09,0A,0B,0C,0D,0E,0F,10,11,12,13,14,15,16,17
	05	C155		----------	NCB31CK-104X	C CAPACITOR	(Addition)	1	01,02,03,04,05,06,07,08,09,0A,0B,0C,0D,0E,0F,10,11,12,13,14,15,16,17
	05	C161		----------	QETN1CM-107Z	E CAPACITOR	(Addition)	1	01,02,03,04,05,06,07,08,09,0A,0B,0C,0D,0E,0F,10,11,12,13,14,15,16,17
	05	C162		----------	NCB31EK-473X	C CAPACITOR	(Addition)	1	01,02,03,04,05,06,07,08,09,0A,0B,0C,0D,0E,0F,10,11,12,13,14,15,16,17
	05	C166		----------	NEAF1CM-106X-M	E CAPACITOR	(Addition)	1	01,02,03,04,05,06,07,08,09,0A,0B,0C,0D,0E,0F,10,11,12,13,14,15,16,17
	05	C168		----------	QETN1HM-225Z	E CAPACITOR	(Addition)	1	01,02,03,04,05,06,07,08,09,0A,0B,0C,0D,0E,0F,10,11,12,13,14,15,16,17
	05	C171		----------	QETN1HM-225Z	E CAPACITOR	(Addition)	1	01,02,03,04,05,06,07,08,09,0A,0B,0C,0D,0E,0F,10,11,12,13,14,15,16,17
	05	C172		----------	QTE1H57-225Z	E CAPACITOR	(Addition)	1	01,0A,0B,0C,0D,0E,0F,10,11,12,13,14,15,16,17
	05	C172		----------	QTE1H64-225Z	E CAPACITOR	(Addition)	1	02,03,04,05,06,07,08,09
	05	C174		----------	QETN1HM-225Z	E CAPACITOR	(Addition)	1	01,02,03,04,05,06,07,08,09,0A,0B,0C,0D,0E,0F,10,11,12,13,14,15,16,17
	05	C177		----------	QETN1HM-225Z	E CAPACITOR	(Addition)	1	01,02,03,04,05,06,07,08,09,0A,0B,0C,0D,0E,0F,10,11,12,13,14,15,16,17
	05	C181		----------	QETN1HM-225Z	E CAPACITOR	(Addition)	1	01,02,03,04,05,06,07,08,09,0A,0B,0C,0D,0E,0F,10,11,12,13,14,15,16,17

⚠	Symbol		or	Part No. <Rev.001>	Part No. <Rev.002>	Part Name	Description	Qty	Models
	05	C182		----------	QTE1H57-225Z	E CAPACITOR	(Addition)	1	01,0A,0B,0C,0D,0E,0F,10,11,12,13,14,15,16,17
	05	C182		----------	QTE1H64-225Z	E CAPACITOR	(Addition)	1	02,03,04,05,06,07,08,09
	05	C184		----------	QETN1HM-225Z	E CAPACITOR	(Addition)	1	01,02,03,04,05,06,07,08,09,0A,0B,0C,0D,0E,0F,10,11,12,13,14,15,16,17
	05	C187		----------	QETN1HM-225Z	E CAPACITOR	(Addition)	1	01,02,03,04,05,06,07,08,09,0A,0B,0C,0D,0E,0F,10,11,12,13,14,15,16,17
	05	C206		----------	NCB21CK-105X	C CAPACITOR	(Addition)	1	01,02,03,04,05,06,07,08,09,0A,0B,0C,0D,0E,0F,10,11,12,13,14,15,16,17
	05	C207		----------	NCB20JK-475X	C CAPACITOR	(Addition)	1	01,02,03,04,05,06,07,08,09,0A,0B,0C,0D,0E,0F,10,11,12,13,14,15,16,17
	05	C209		----------	QETN1EM-476Z	E CAPACITOR	(Addition)	1	01,02,03,04,05,06,07,08,09,0A,0B,0C,0D,0E,0F,10,11,12,13,14,15,16,17
	05	C210		----------	NCB31HK-104X	C CAPACITOR	(Addition)	1	01,02,03,04,05,06,07,08,09,0A,0B,0C,0D,0E,0F,10,11,12,13,14,15,16,17
	05	C211		----------	NCB21CK-105X	C CAPACITOR	(Addition)	1	01,02,03,04,05,06,07,08,09,0A,0B,0C,0D,0E,0F,10,11,12,13,14,15,16,17
	05	C212		----------	NCB20JK-475X	C CAPACITOR	(Addition)	1	01,02,03,04,05,06,07,08,09,0A,0B,0C,0D,0E,0F,10,11,12,13,14,15,16,17
	05	C213		----------	QETN1AM-477Z	E CAPACITOR	(Addition)	1	01,02,03,04,05,06,07,08,09,0A,0B,0C,0D,0E,0F,10,11,12,13,14,15,16,17
	05	C214		----------	QETN1EM-476Z	E CAPACITOR	(Addition)	1	01,02,03,04,05,06,07,08,09,0A,0B,0C,0D,0E,0F,10,11,12,13,14,15,16,17
	05	C215		----------	NCB31HK-104X	C CAPACITOR	(Addition)	1	01,02,03,04,05,06,07,08,09,0A,0B,0C,0D,0E,0F,10,11,12,13,14,15,16,17
	05	C220		----------	QETN1HM-106Z	E CAPACITOR	(Addition)	1	01,02,03,04,05,06,07,08,09,0A,0B,0C,0D,0E,0F,10,11,12,13,14,15,16,17
	05	C221		----------	QETN1HM-106Z	E CAPACITOR	(Addition)	1	01,02,03,04,05,06,07,08,09,0A,0B,0C,0D,0E,0F,10,11,12,13,14,15,16,17
	05	C222		----------	NCB31EK-104X	C CAPACITOR	(Addition)	1	01,02,03,04,05,06,07,08,09,0A,0B,0C,0D,0E,0F,10,11,12,13,14,15,16,17
	05	C223		----------	QETN1EM-476Z	E CAPACITOR	(Addition)	1	01,02,03,04,05,06,07,08,09,0A,0B,0C,0D,0E,0F,10,11,12,13,14,15,16,17
	05	C226		----------	NCB31HK-102X	C CAPACITOR	(Addition)	1	01,02,03,04,05,06,07,08,09,0A,0B,0C,0D,0E,0F,10,11,12,13,14,15,16,17
	05	C267		----------	QETN1HM-106Z	E CAPACITOR	(Addition)	1	01,0A,0B,0C,0D,0E,0F,10,11,12,13,14,15,16,17
	05	C301		----------	NCB31HK-223X	C CAPACITOR	(Addition)	1	01,02,03,04,05,06,07,08,09,0A,0B,0C,0D,0E,0F,10,11,12,13,14,15,16,17
	05	C302		----------	QTE1C57-106Z	E CAPACITOR	(Addition)	1	01,02,03,04,05,06,07,08,09,0A,0B,0C,0D,0E,0F,10,11,12,13,14,15,16,17
	05	C303		----------	QEKJ1EM-106Z	E CAPACITOR	(Addition)	1	01,02,03,04,05,06,07,08,09,0A,0B,0C,0D,0E,0F,10,11,12,13,14,15,16,17
	05	C304		----------	QEKJ1HM-225Z	E CAPACITOR	(Addition)	1	01,02,03,04,05,06,07,08,09,0A,0B,0C,0D,0E,0F,10,11,12,13,14,15,16,17
	05	C306		----------	NCB31HK-103X	C CAPACITOR	(Addition)	1	01,02,03,04,05,06,07,08,09,0A,0B,0C,0D,0E,0F,10,11,12,13,14,15,16,17
	05	C307		----------	QETN1HM-226Z	E CAPACITOR	(Addition)	1	01,02,03,04,05,06,07,08,09,0A,0B,0C,0D,0E,0F,10,11,12,13,14,15,16,17
	05	C308		----------	NCB31HK-223X	C CAPACITOR	(Addition)	1	01,02,03,04,05,06,07,08,09,0A,0B,0C,0D,0E,0F,10,11,12,13,14,15,16,17
	05	C310		----------	NDCA1HJ-470W	C CAPACITOR	(Addition)	1	01,0A,0B,0C,0D,0E,0F,10,11,12,13,14,15,16,17
	05	C311		----------	QFV91HJ-474Z	MF CAPACITOR	(Addition)	1	01,02,03,04,05,06,07,08,09,0A,0B,0C,0D,0E,0F,10,11,12,13,14,15,16,17
	05	C312		----------	NDC31HJ-470X	C CAPACITOR	(Addition)	1	01,0A,0B,0C,0D,0E,0F,10,11,12,13,14,15,16,17
	05	C312		----------	NDC31HJ-101X	C CAPACITOR	(Addition)	1	02,03,04,05,06,07,08,09
	05	C319		----------	NDC31HJ-470X	C CAPACITOR	(Addition)	1	01,0A,0B,0C,0D,0E,0F,10,11,12,13,14,15,16,17
	05	C320		----------	NDC31HJ-470X	C CAPACITOR	(Addition)	1	01,0A,0B,0C,0D,0E,0F,10,11,12,13,14,15,16,17
	05	C321		----------	QFV91HJ-474Z	MF CAPACITOR	(Addition)	1	01,02,03,04,05,06,07,08,09,0A,0B,0C,0D,0E,0F,10,11,12,13,14,15,16,17
	05	C322		----------	NDC31HJ-470X	C CAPACITOR	(Addition)	1	01,0A,0B,0C,0D,0E,0F,10,11,12,13,14,15,16,17
	05	C322		----------	NDC31HJ-101X	C CAPACITOR	(Addition)	1	02,03,04,05,06,07,08,09
	05	C329		----------	NDC31HJ-470X	C CAPACITOR	(Addition)	1	01,0A,0B,0C,0D,0E,0F,10,11,12,13,14,15,16,17
	05	C330		----------	NDC31HJ-470X	C CAPACITOR	(Addition)	1	01,0A,0B,0C,0D,0E,0F,10,11,12,13,14,15,16,17

⚠	Symbol		or	Part No. <Rev.001>	Part No. <Rev.002>	Part Name	Description	Qty	Models
	05	C331		----------	QFV91HJ-474Z	MF CAPACITOR	(Addition)	1	01,02,03,04,05,06,07,08,09,0A,0B,0C,0D,0E,0F,10,11,12,13,14,15,16,17
	05	C332		----------	NDC31HJ-470X	C CAPACITOR	(Addition)	1	01,0A,0B,0C,0D,0E,0F,10,11,12,13,14,15,16,17
	05	C332		----------	NDC31HJ-101X	C CAPACITOR	(Addition)	1	02,03,04,05,06,07,08,09
	05	C335		----------	NDC31HJ-220X	C CAPACITOR	(Addition)	1	01,0A,0B,0C,0D,0E,0F,10,11,12,13,14,15,16,17
	05	C339		----------	NDCA1HJ-470W	C CAPACITOR	(Addition)	1	01,0A,0B,0C,0D,0E,0F,10,11,12,13,14,15,16,17
	05	C340		----------	NDC31HJ-470X	C CAPACITOR	(Addition)	1	01,0A,0B,0C,0D,0E,0F,10,11,12,13,14,15,16,17
	05	C341		----------	QFV91HJ-474Z	MF CAPACITOR	(Addition)	1	01,02,03,04,05,06,07,08,09,0A,0B,0C,0D,0E,0F,10,11,12,13,14,15,16,17
	05	C342		----------	NDC31HJ-470X	C CAPACITOR	(Addition)	1	01,0A,0B,0C,0D,0E,0F,10,11,12,13,14,15,16,17
	05	C342		----------	NDC31HJ-101X	C CAPACITOR	(Addition)	1	02,03,04,05,06,07,08,09
	05	C345		----------	NDC31HJ-220X	C CAPACITOR	(Addition)	1	01,0A,0B,0C,0D,0E,0F,10,11,12,13,14,15,16,17
	05	C346		----------	QETN1HM-475Z	E CAPACITOR	(Addition)	1	01,02,03,04,05,06,07,08,09,0A,0B,0C,0D,0E,0F,10,11,12,13,14,15,16,17
	05	C349		----------	NDCA1HJ-470W	C CAPACITOR	(Addition)	1	01,0A,0B,0C,0D,0E,0F,10,11,12,13,14,15,16,17
	05	C356		----------	QETN1HM-475Z	E CAPACITOR	(Addition)	1	01,02,03,04,05,06,07,08,09,0A,0B,0C,0D,0E,0F,10,11,12,13,14,15,16,17
	05	C411		----------	QETN1HM-106Z	E CAPACITOR	(Addition)	1	01,02,03,04,05,06,07,08,09,0A,0B,0C,0D,0E,0F,10,11,12,13,14,15,16,17
	05	C421		----------	NCB31CK-105X	C CAPACITOR	(Addition)	1	01,02,03,04,05,06,07,08,09,0A,0B,0C,0D,0E,0F,10,11,12,13,14,15,16,17
	05	C422		----------	NCB31CK-103X	C CAPACITOR	(Addition)	1	01,02,03,04,05,06,07,08,09,0A,0B,0C,0D,0E,0F,10,11,12,13,14,15,16,17
	05	C433		----------	QETN1HM-106Z	E CAPACITOR	(Addition)	1	01,02,03,04,05,06,07,08,09,0A,0B,0C,0D,0E,0F,10,11,12,13,14,15,16,17
	05	C434		----------	QETN1HM-106Z	E CAPACITOR	(Addition)	1	01,02,03,04,05,06,07,08,09,0A,0B,0C,0D,0E,0F,10,11,12,13,14,15,16,17
	05	C435		----------	NCB31HK-103X	C CAPACITOR	(Addition)	1	01,02,03,04,05,06,07,08,09,0A,0B,0C,0D,0E,0F,10,11,12,13,14,15,16,17
	05	C441		----------	NCJ11EK-106X-R	C CAPACITOR	(Addition)	1	01,02,03,04,05,06,07,08,09,0A,0B,0C,0D,0E,0F,10,11,12,13,14,15,16,17
	05	C442		----------	NCJ11EK-106X-R	C CAPACITOR	(Addition)	1	01,02,03,04,05,06,07,08,09,0A,0B,0C,0D,0E,0F,10,11,12,13,14,15,16,17
	05	C443		----------	NCJ11EK-106X-R	C CAPACITOR	(Addition)	1	01,02,03,04,05,06,07,08,09,0A,0B,0C,0D,0E,0F,10,11,12,13,14,15,16,17
	05	C444		----------	NCB31EK-104X	C CAPACITOR	(Addition)	1	01,02,03,04,05,06,07,08,09,0A,0B,0C,0D,0E,0F,10,11,12,13,14,15,16,17
	05	C581		----------	NDC31HJ-331X	C CAPACITOR	(Addition)	1	01,02,03,04,05,06,07,08,09,0A,0B,0C,0D,0E,0F,10,11,12,13,14,15,16,17
	05	C582		----------	QTE1H57-225Z	E CAPACITOR	(Addition)	1	01,02,03,04,05,06,07,08,09,0A,0B,0C,0D,0E,0F,10,11,12,13,14,15,16,17
	05	C583		----------	NDC31HJ-470X	C CAPACITOR	(Addition)	1	01,02,03,04,05,06,07,08,09,0A,0B,0C,0D,0E,0F,10,11,12,13,14,15,16,17
	05	C591		----------	NDC31HJ-331X	C CAPACITOR	(Addition)	1	01,02,03,04,05,06,07,08,09,0A,0B,0C,0D,0E,0F,10,11,12,13,14,15,16,17
	05	C592		----------	QTE1H57-225Z	E CAPACITOR	(Addition)	1	01,02,03,04,05,06,07,08,09,0A,0B,0C,0D,0E,0F,10,11,12,13,14,15,16,17
	05	C593		----------	NDC31HJ-470X	C CAPACITOR	(Addition)	1	01,02,03,04,05,06,07,08,09,0A,0B,0C,0D,0E,0F,10,11,12,13,14,15,16,17
	05	C594		----------	QETN1EM-476Z	E CAPACITOR	(Addition)	1	01,02,03,04,05,06,07,08,09,0A,0B,0C,0D,0E,0F,10,11,12,13,14,15,16,17
	05	C595		----------	NCB31CK-104X	C CAPACITOR	(Addition)	1	01,02,03,04,05,06,07,08,09,0A,0B,0C,0D,0E,0F,10,11,12,13,14,15,16,17
	05	C596		----------	QETN1EM-107Z	E CAPACITOR	(Addition)	1	01,02,03,04,05,06,07,08,09,0A,0B,0C,0D,0E,0F,10,11,12,13,14,15,16,17
	05	C597		----------	QETN1EM-476Z	E CAPACITOR	(Addition)	1	01,02,03,04,05,06,07,08,09,0A,0B,0C,0D,0E,0F,10,11,12,13,14,15,16,17
	05	C702		----------	NCB31EK-104X	C CAPACITOR	(Addition)	1	01,02,03,04,05,06,07,08,09,0A,0B,0C,0D,0E,0F,10,11,12,13,14,15,16,17
	05	C703		----------	NCB31HK-102X	C CAPACITOR	(Addition)	1	01,02,03,04,05,06,07,08,09,0A,0B,0C,0D,0E,0F,10,11,12,13,14,15,16,17
	05	C704		----------	QETN0JM-108Z	E CAPACITOR	(Addition)	1	01,02,03,04,05,06,07,08,09,0A,0B,0C,0D,0E,0F,10,11,12,13,14,15,16,17

⚠	Symbol		or	Part No. <Rev.001>	Part No. <Rev.002>	Part Name	Description	Qty	Models
	05	C706		----------	NCB31CK-105X	C CAPACITOR	(Addition)	1	01,02,03,04,05,06,07,08,09,0A,0B,0C,0D,0E,0F,10,11,12,13,14,15,16,17
	05	C708		----------	NDC31HJ-120X	C CAPACITOR	(Addition)	1	01,02,03,04,05,06,07,08,09,0A,0B,0C,0D,0E,0F,10,11,12,13,14,15,16,17
	05	C709		----------	NDC31HJ-120X	C CAPACITOR	(Addition)	1	01,02,03,04,05,06,07,08,09,0A,0B,0C,0D,0E,0F,10,11,12,13,14,15,16,17
	05	C710		----------	NCB31HK-103X	C CAPACITOR	(Addition)	1	01,02,03,04,05,06,07,08,09,0A,0B,0C,0D,0E,0F,10,11,12,13,14,15,16,17
	05	C711		----------	NCB31HK-103X	C CAPACITOR	(Addition)	1	01,02,03,04,05,06,07,08,09,0A,0B,0C,0D,0E,0F,10,11,12,13,14,15,16,17
	05	C712		----------	NCB31HK-103X	C CAPACITOR	(Addition)	1	01,02,03,04,05,06,07,08,09,0A,0B,0C,0D,0E,0F,10,11,12,13,14,15,16,17
	05	C724		----------	NCB31HK-102X	C CAPACITOR	(Addition)	1	01,02,03,04,05,06,07,08,09,0A,0B,0C,0D,0E,0F,10,11,12,13,14,15,16,17
	05	C728		----------	NDC31HJ-120X	C CAPACITOR	(Addition)	1	01,02,03,04,05,06,07,08,09,0A,0B,0C,0D,0E,0F,10,11,12,13,14,15,16,17
	05	C729		----------	NDC31HJ-120X	C CAPACITOR	(Addition)	1	01,02,03,04,05,06,07,08,09,0A,0B,0C,0D,0E,0F,10,11,12,13,14,15,16,17
	05	C733		----------	NCB31HK-471X	C CAPACITOR	(Addition)	1	01,02,03,04,05,06,07,08,09,0A,0B,0C,0D,0E,0F,10,11,12,13,14,15,16,17
	05	C772		----------	NCB31HK-103X	C CAPACITOR	(Addition)	1	01,02,03,04,05,06,07,08,09,0A,0B,0C,0D,0E,0F,10,11,12,13,14,15,16,17
	05	C781		----------	QETN1EM-476Z	E CAPACITOR	(Addition)	1	01,02,03,04,05,06,07,08,09,0A,0B,0C,0D,0E,0F,10,11,12,13,14,15,16,17
	05	C783		----------	QETN1EM-476Z	E CAPACITOR	(Addition)	1	01,0A,0B,0C,0D,0E,0F,10,11,12,13,14,15,16,17
	05	C784		----------	QETN1EM-476Z	E CAPACITOR	(Addition)	1	01,02,03,04,05,06,07,08,09,0A,0B,0C,0D,0E,0F,10,11,12,13,14,15,16,17
	05	C785		----------	QETN1HM-225Z	E CAPACITOR	(Addition)	1	01,02,03,04,05,06,07,08,09,0A,0B,0C,0D,0E,0F,10,11,12,13,14,15,16,17
	05	C801		----------	NCB31CK-473X	C CAPACITOR	(Addition)	1	01,02,03,04,05,06,07,08,09,0A,0B,0C,0D,0E,0F,10,11,12,13,14,15,16,17
	05	C803		----------	NCB31CK-104X	C CAPACITOR	(Addition)	1	01,02,03,04,05,06,07,08,09,0A,0B,0C,0D,0E,0F,10,11,12,13,14,15,16,17
	05	C804		----------	NCB31HK-102X	C CAPACITOR	(Addition)	1	01,02,03,04,05,06,07,08,09,0A,0B,0C,0D,0E,0F,10,11,12,13,14,15,16,17
	05	C805		----------	NCB31HK-102X	C CAPACITOR	(Addition)	1	01,02,03,04,05,06,07,08,09,0A,0B,0C,0D,0E,0F,10,11,12,13,14,15,16,17
	05	C806		----------	NCB31CK-104X	C CAPACITOR	(Addition)	1	01,02,03,04,05,06,07,08,09,0A,0B,0C,0D,0E,0F,10,11,12,13,14,15,16,17
	05	C807		----------	NCB31EK-104X	C CAPACITOR	(Addition)	1	01,02,03,04,05,06,07,08,09,0A,0B,0C,0D,0E,0F,10,11,12,13,14,15,16,17
	05	C841		----------	NCB31EK-104X	C CAPACITOR	(Addition)	1	01,02,03,04,05,06,07,08,09,0A,0B,0C,0D,0E,0F,10,11,12,13,14,15,16,17
	05	C851		----------	NCB31CK-104X	C CAPACITOR	(Addition)	1	01,02,03,04,06,07,09,0A,0D,0E,0F,10,12,13,14,16,17
	05	C881		----------	QETN1HM-226Z	E CAPACITOR	(Addition)	1	01,02,03,04,05,06,07,08,09,0A,0B,0C,0D,0E,0F,10,11,12,13,14,15,16,17
	05	C882		----------	NCB31CK-103X	C CAPACITOR	(Addition)	1	01,02,03,04,05,06,07,08,09,0A,0B,0C,0D,0E,0F,10,11,12,13,14,15,16,17
	05	C891		----------	NCB31CK-104X	C CAPACITOR	(Addition)	1	01,02,03,04,05,06,07,08,09,0A,0B,0C,0D,0E,0F,10,11,12,13,14,15,16,17
	05	C892		----------	NCB31CK-104X	C CAPACITOR	(Addition)	1	01,02,03,04,05,06,07,08,09,0A,0B,0C,0D,0E,0F,10,11,12,13,14,15,16,17
	05	C901		----------	QEZ0870-278	E CAPACITOR	(Addition)	1	01,02,03,04,05,06,07,08,09,0A,0B,0C,0D,0E,0F,10,11,12,13,14,15,16,17
	05	C902		----------	NCB31EK-104X	C CAPACITOR	(Addition)	1	01,02,03,04,05,06,07,08,09,0A,0B,0C,0D,0E,0F,10,11,12,13,14,15,16,17
	05	C903		----------	QETN1HM-225Z	E CAPACITOR	(Addition)	1	01,02,03,04,05,06,07,08,09,0A,0B,0C,0D,0E,0F,10,11,12,13,14,15,16,17
	05	C904		----------	NCB31EK-104X	C CAPACITOR	(Addition)	1	01,02,03,04,05,06,07,08,09,0A,0B,0C,0D,0E,0F,10,11,12,13,14,15,16,17
	05	C905		----------	NCB31EK-104X	C CAPACITOR	(Addition)	1	01,02,03,04,05,06,07,08,09,0A,0B,0C,0D,0E,0F,10,11,12,13,14,15,16,17
	05	C906		----------	QETN1AM-227Z	E CAPACITOR	(Addition)	1	01,02,03,04,05,06,07,08,09,0A,0B,0C,0D,0E,0F,10,11,12,13,14,15,16,17
	05	C907		----------	QETN1CM-107Z	E CAPACITOR	(Addition)	1	01,02,03,04,05,06,07,08,09,0A,0B,0C,0D,0E,0F,10,11,12,13,14,15,16,17
	05	C908		----------	NCB31HK-103X	C CAPACITOR	(Addition)	1	01,02,03,04,05,06,07,08,09,0A,0B,0C,0D,0E,0F,10,11,12,13,14,15,16,17

⚠	Symbol		or	Part No. <Rev.001>	Part No. <Rev.002>	Part Name	Description	Qty	Models
	05	C909		----------	QETN1HM-226Z	E CAPACITOR	(Addition)	1	01,02,03,04,05,06,07,08,09,0A,0B,0C,0D,0E,0F,10,11,12,13,14,15,16,17
	05	C910		----------	QEKJ1CM-476Z	E CAPACITOR	(Addition)	1	01,02,03,04,05,06,07,08,09,0A,0B,0C,0D,0E,0F,10,11,12,13,14,15,16,17
	05	C911		----------	QETN1HM-106Z	E CAPACITOR	(Addition)	1	01,02,03,04,05,06,07,08,09,0A,0B,0C,0D,0E,0F,10,11,12,13,14,15,16,17
	05	C913		----------	QETN1HM-106Z	E CAPACITOR	(Addition)	1	01,02,03,04,05,06,07,08,09,0A,0B,0C,0D,0E,0F,10,11,12,13,14,15,16,17
	05	C921		----------	NCB31HK-272X	C CAPACITOR	(Addition)	1	01,02,03,04,05,06,07,08,09,0A,0B,0C,0D,0E,0F,10,11,12,13,14,15,16,17
	05	C923		----------	NCB31HK-332X	C CAPACITOR	(Addition)	1	01,02,03,04,05,06,07,08,09,0A,0B,0C,0D,0E,0F,10,11,12,13,14,15,16,17
	05	C924		----------	NCB31AK-105X	C CAPACITOR	(Addition)	1	01,02,03,04,05,06,07,08,09,0A,0B,0C,0D,0E,0F,10,11,12,13,14,15,16,17
	05	C925		----------	NCB31AK-334X	C CAPACITOR	(Addition)	1	01,02,03,04,05,06,07,08,09,0A,0B,0C,0D,0E,0F,10,11,12,13,14,15,16,17
	05	C926		----------	NCB31HK-104X	C CAPACITOR	(Addition)	1	01,02,03,04,05,06,07,08,09,0A,0B,0C,0D,0E,0F,10,11,12,13,14,15,16,17
	05	C928		----------	NCB31HK-102X	C CAPACITOR	(Addition)	1	01,02,03,04,05,06,07,08,09,0A,0B,0C,0D,0E,0F,10,11,12,13,14,15,16,17
	05	C929		----------	NCB31EK-104X	C CAPACITOR	(Addition)	1	01,02,03,04,05,06,07,08,09,0A,0B,0C,0D,0E,0F,10,11,12,13,14,15,16,17
	05	C930		----------	NCB31EK-104X	C CAPACITOR	(Addition)	1	01,02,03,04,05,06,07,08,09,0A,0B,0C,0D,0E,0F,10,11,12,13,14,15,16,17
	05	C932		----------	QETN1HM-226Z	E CAPACITOR	(Addition)	1	01,02,03,04,05,06,07,08,09,0A,0B,0C,0D,0E,0F,10,11,12,13,14,15,16,17
	05	C933		----------	NCB20JK-106X	C CAPACITOR	(Addition)	1	01,02,03,04,05,06,07,08,09,0A,0B,0C,0D,0E,0F,10,11,12,13,14,15,16,17
	05	C934		----------	NBZ0009-127X	E. CAPACITOR	(Addition)	1	01,02,03,04,05,06,07,08,09,0A,0B,0C,0D,0E,0F,10,11,12,13,14,15,16,17
	05	C935		----------	NCB31HK-332X	C CAPACITOR	(Addition)	1	01,02,03,04,05,06,07,08,09,0A,0B,0C,0D,0E,0F,10,11,12,13,14,15,16,17
	05	C936		----------	QETN1HM-226Z	E CAPACITOR	(Addition)	1	01,02,03,04,05,06,07,08,09,0A,0B,0C,0D,0E,0F,10,11,12,13,14,15,16,17
	05	C938		----------	NBZ0009-127X	E. CAPACITOR	(Addition)	1	01,02,03,04,05,06,07,08,09,0A,0B,0C,0D,0E,0F,10,11,12,13,14,15,16,17
	05	C939		----------	NCB31EK-563X	C CAPACITOR	(Addition)	1	01,02,03,04,05,06,07,08,09,0A,0B,0C,0D,0E,0F,10,11,12,13,14,15,16,17
	05	C940		----------	NCB31HK-103X	C CAPACITOR	(Addition)	1	01,02,03,04,05,06,07,08,09,0A,0B,0C,0D,0E,0F,10,11,12,13,14,15,16,17
	05	C952		----------	NCB31HK-103X	C CAPACITOR	(Addition)	1	01,02,03,04,05,06,07,08,09,0A,0B,0C,0D,0E,0F,10,11,12,13,14,15,16,17
	05	C953		----------	NCB31CK-105X	C CAPACITOR	(Addition)	1	01,02,03,04,05,06,07,08,09,0A,0B,0C,0D,0E,0F,10,11,12,13,14,15,16,17
	05	C954		----------	NDC31HJ-120X	C CAPACITOR	(Addition)	1	01,02,03,04,05,06,07,08,09,0A,0B,0C,0D,0E,0F,10,11,12,13,14,15,16,17
	05	C961		----------	QETN1AM-227Z	E CAPACITOR	(Addition)	1	01,02,03,04,05,06,07,08,09,0A,0B,0C,0D,0E,0F,10,11,12,13,14,15,16,17
	05	C962		----------	NCB31HK-103X	C CAPACITOR	(Addition)	1	01,02,03,04,05,06,07,08,09,0A,0B,0C,0D,0E,0F,10,11,12,13,14,15,16,17
	05	C971		----------	NCB31HK-103X	C CAPACITOR	(Addition)	1	01,02,03,04,05,06,07,08,09,0A,0B,0C,0D,0E,0F,10,11,12,13,14,15,16,17
	05	C972		----------	NCB31HK-104X	C CAPACITOR	(Addition)	1	01,02,03,04,05,06,07,08,09,0A,0B,0C,0D,0E,0F,10,11,12,13,14,15,16,17
	05	C973		----------	NCB31HK-272X	C CAPACITOR	(Addition)	1	01,02,03,04,05,06,07,08,09,0A,0B,0C,0D,0E,0F,10,11,12,13,14,15,16,17
	05	C974		----------	NCB31HK-104X	C CAPACITOR	(Addition)	1	01,02,03,04,05,06,07,08,09,0A,0B,0C,0D,0E,0F,10,11,12,13,14,15,16,17
	05	C975		----------	NCB31CK-105X	C CAPACITOR	(Addition)	1	01,02,03,04,05,06,07,08,09,0A,0B,0C,0D,0E,0F,10,11,12,13,14,15,16,17
	05	C976		----------	NCB31HK-222X	C CAPACITOR	(Addition)	1	01,02,03,04,05,06,07,08,09,0A,0B,0C,0D,0E,0F,10,11,12,13,14,15,16,17
	05	C978		----------	NCB31HK-682X	C CAPACITOR	(Addition)	1	01,02,03,04,05,06,07,08,09,0A,0B,0C,0D,0E,0F,10,11,12,13,14,15,16,17
	05	C979		----------	NCB31HK-104X	C CAPACITOR	(Addition)	1	01,02,03,04,05,06,07,08,09,0A,0B,0C,0D,0E,0F,10,11,12,13,14,15,16,17
	05	C980		----------	NCJ11EK-106X-R	C CAPACITOR	(Addition)	1	01,02,03,04,05,06,07,08,09,0A,0B,0C,0D,0E,0F,10,11,12,13,14,15,16,17
	05	C981		----------	NDC31HJ-221X	C CAPACITOR	(Addition)	1	01,02,03,04,05,06,07,08,09,0A,0B,0C,0D,0E,0F,10,11,12,13,14,15,16,17

⚠	Symbol		or	Part No. <Rev.001>	Part No. <Rev.002>	Part Name	Description	Qty	Models
	05	C982		----------	NCJ11EK-106X-R	C CAPACITOR	(Addition)	1	01,02,03,04,05,06,07,08,09,0A,0B,0C,0D,0E,0F,10,11,12,13,14,15,16,17
	05	C983		----------	QEZ0595-477Z	E CAPACITOR	(Addition)	1	01,02,03,04,05,06,07,08,09,0A,0B,0C,0D,0E,0F,10,11,12,13,14,15,16,17
	05	C984		----------	NCB31HK-104X	C CAPACITOR	(Addition)	1	01,02,03,04,05,06,07,08,09,0A,0B,0C,0D,0E,0F,10,11,12,13,14,15,16,17
	05	C985		----------	NCF21HZ-105X	C CAPACITOR	(Addition)	1	01,02,03,04,05,06,07,08,09,0A,0B,0C,0D,0E,0F,10,11,12,13,14,15,16,17
	05	C986		----------	NCB31HK-104X	C CAPACITOR	(Addition)	1	01,02,03,04,05,06,07,08,09,0A,0B,0C,0D,0E,0F,10,11,12,13,14,15,16,17
	05	C987		----------	NCB31CK-105X	C CAPACITOR	(Addition)	1	01,02,03,04,05,06,07,08,09,0A,0B,0C,0D,0E,0F,10,11,12,13,14,15,16,17
	05	C988		----------	QETN1EM-476Z	E CAPACITOR	(Addition)	1	01,02,03,04,05,06,07,08,09,0A,0B,0C,0D,0E,0F,10,11,12,13,14,15,16,17
	05	C994		----------	NCB31EK-104X	C CAPACITOR	(Addition)	1	01,02,03,04,05,06,07,08,09,0A,0B,0C,0D,0E,0F,10,11,12,13,14,15,16,17
	05	C1006		----------	NCB31EK-103X	C CAPACITOR	(Addition)	1	01,02,03,04,05,06,07,08,09,0A,0B,0C,0D,0E,0F,10,11,12,13,14,15,16,17
	05	C1108		----------	NCB31EK-104X	C CAPACITOR	(Addition)	1	01,02,03,04,05,06,07,08,09,0A,0B,0C,0D,0E,0F,10,11,12,13,14,15,16,17
	05	C1109		----------	NBZ0009-127X	E. CAPACITOR	(Addition)	1	01,02,03,04,05,06,07,08,09,0A,0B,0C,0D,0E,0F,10,11,12,13,14,15,16,17
	05	C1110		----------	NCB31HK-103X	C CAPACITOR	(Addition)	1	01,02,03,04,05,06,07,08,09,0A,0B,0C,0D,0E,0F,10,11,12,13,14,15,16,17
	05	C1111		----------	QEZ0595-477Z	E CAPACITOR	(Addition)	1	01,02,03,04,05,06,07,08,09,0A,0B,0C,0D,0E,0F,10,11,12,13,14,15,16,17
	05	C1112		----------	NCB31EK-104X	C CAPACITOR	(Addition)	1	01,02,03,04,05,06,07,08,09,0A,0B,0C,0D,0E,0F,10,11,12,13,14,15,16,17
	05	C1113		----------	NCB31HK-472X	C CAPACITOR	(Addition)	1	01,02,03,04,05,06,07,08,09,0A,0B,0C,0D,0E,0F,10,11,12,13,14,15,16,17
	05	C1114		----------	NCB31HK-103X	C CAPACITOR	(Addition)	1	01,02,03,04,05,06,07,08,09,0A,0B,0C,0D,0E,0F,10,11,12,13,14,15,16,17
	05	C1118		----------	NCB31EK-104X	C CAPACITOR	(Addition)	1	01,02,03,04,05,06,07,08,09,0A,0B,0C,0D,0E,0F,10,11,12,13,14,15,16,17
	05	C1122		----------	QETN0JM-108Z	E CAPACITOR	(Addition)	1	01,02,03,04,05,06,07,08,09,0A,0B,0C,0D,0E,0F,10,11,12,13,14,15,16,17
	05	C1222		----------	QETN1HM-106Z	E CAPACITOR	(Addition)	1	01,02,03,04,05,06,07,08,09,0A,0B,0C,0D,0E,0F,10,11,12,13,14,15,16,17
	05	C1226		----------	NCB31HK-103X	C CAPACITOR	(Addition)	1	01,02,03,04,05,06,07,08,09,0A,0B,0C,0D,0E,0F,10,11,12,13,14,15,16,17
	05	C1661		----------	NCB31EK-104X	C CAPACITOR	(Addition)	1	01,0A,0B,0C,0D,0E,0F,10,11,12,13,14,15,16,17
	05	C1662		----------	QERF0JM-337Z	E CAPACITOR	(Addition)	1	01,0A,0B,0C,0D,0E,0F,10,11,12,13,14,15,16,17
	05	C1664		----------	NCB31EK-104X	C CAPACITOR	(Addition)	1	01,0A,0B,0C,0D,0E,0F,10,11,12,13,14,15,16,17
	05	R1		----------	NRSA63J-474X	MG RESISTOR	(Addition)	1	01,02,03,04,05,06,07,08,09,0A,0B,0C,0D,0E,0F,10,11,12,13,14,15,16,17
	05	R2		----------	NRSA63J-474X	MG RESISTOR	(Addition)	1	01,02,03,04,05,06,07,08,09,0A,0B,0C,0D,0E,0F,10,11,12,13,14,15,16,17
	05	R3		----------	NRSA63J-472X	MG RESISTOR	(Addition)	1	01,02,03,04,05,06,07,08,09,0A,0B,0C,0D,0E,0F,10,11,12,13,14,15,16,17
	05	R4		----------	NRS181J-220X	MG RESISTOR	(Addition)	1	01,02,03,04,05,06,07,08,09,0A,0B,0C,0D,0E,0F,10,11,12,13,14,15,16,17
	05	R5		----------	NRSA6AJ-472W	MG RESISTOR	(Addition)	1	01,02,03,04,05,06,07,08,09,0A,0B,0C,0D,0E,0F,10,11,12,13,14,15,16,17
	05	R6		----------	NRSA6AJ-472W	MG RESISTOR	(Addition)	1	01,02,03,04,05,06,07,08,09,0A,0B,0C,0D,0E,0F,10,11,12,13,14,15,16,17
	05	R11		----------	NRS181J-4R7X	MG RESISTOR	(Addition)	1	01,02,03,04,05,06,07,08,09,0A,0B,0C,0D,0E,0F,10,11,12,13,14,15,16,17
	05	R17		----------	NRSA63J-101X	MG RESISTOR	(Addition)	1	01,02,03,04,05,06,07,08,09,0A,0B,0C,0D,0E,0F,10,11,12,13,14,15,16,17
	05	R18		----------	NRSA6AJ-0R0W	MG RESISTOR	(Addition)	1	01,02,03,04,05,06,07,08,09,0A,0B,0C,0D,0E,0F,10,11,12,13,14,15,16,17
	05	R19		----------	NRSA6AJ-0R0W	MG RESISTOR	(Addition)	1	01,02,03,04,05,06,07,08,09,0A,0B,0C,0D,0E,0F,10,11,12,13,14,15,16,17
	05	R71		----------	NRSA6AJ-222W	MG RESISTOR	(Addition)	1	0B,0C,11,15
	05	R72		----------	NRSA6AJ-222W	MG RESISTOR	(Addition)	1	0B,0C,11,15
	05	R74		----------	NRSA6AJ-0R0W	MG RESISTOR	(Addition)	1	0B,0C,11,15
	05	R141		----------	NRSA63J-473X	MG RESISTOR	(Addition)	1	01,02,03,04,05,06,07,08,09,0A,0B,0C,0D,0E,0F,10,11,12,13,14,15,16,17

⚠	Symbol		or	Part No. <Rev.001>	Part No. <Rev.002>	Part Name	Description	Qty	Models
	05	R142		----------	NRSA63J-0R0X	MG RESISTOR	(Addition)	1	01,02,03,04,05,06,07,08,09,0A,0B,0C,0D,0E,0F,10,11,12,13,14,15,16,17
	05	R151		----------	NRSA63J-473X	MG RESISTOR	(Addition)	1	01,02,03,04,05,06,07,08,09,0A,0B,0C,0D,0E,0F,10,11,12,13,14,15,16,17
	05	R152		----------	NRSA63J-0R0X	MG RESISTOR	(Addition)	1	01,02,03,04,05,06,07,08,09,0A,0B,0C,0D,0E,0F,10,11,12,13,14,15,16,17
	05	R155		----------	NRSA63J-471X	MG RESISTOR	(Addition)	1	01,02,03,04,05,06,07,08,09,0A,0B,0C,0D,0E,0F,10,11,12,13,14,15,16,17
	05	R162		----------	NRSA6AJ-473W	MG RESISTOR	(Addition)	1	01,02,03,04,05,06,07,08,09,0A,0B,0C,0D,0E,0F,10,11,12,13,14,15,16,17
	05	R164		----------	NRSA6AJ-473W	MG RESISTOR	(Addition)	1	01,02,03,04,05,06,07,08,09,0A,0B,0C,0D,0E,0F,10,11,12,13,14,15,16,17
	05	R165		----------	NRSA6AJ-473W	MG RESISTOR	(Addition)	1	01,0A,0B,0C,0D,0E,0F,10,11,12,13,14,15,16,17
	05	R166		----------	NRSA6AJ-271W	MG RESISTOR	(Addition)	1	01,02,03,04,05,06,07,08,09,0A,0B,0C,0D,0E,0F,10,11,12,13,14,15,16,17
	05	R167		----------	NRSA6AJ-271W	MG RESISTOR	(Addition)	1	01,02,03,04,05,06,07,08,09,0A,0B,0C,0D,0E,0F,10,11,12,13,14,15,16,17
	05	R181		----------	NRSA6AJ-0R0W	MG RESISTOR	(Addition)	1	01,02,03,04,05,06,07,08,09,0A,0B,0C,0D,0E,0F,10,11,12,13,14,15,16,17
	05	R182		----------	NRSA6AJ-0R0W	MG RESISTOR	(Addition)	1	01,02,03,04,05,06,07,08,09,0A,0B,0C,0D,0E,0F,10,11,12,13,14,15,16,17
	05	R205		----------	NRSA63J-105X	MG RESISTOR	(Addition)	1	01,02,03,04,05,06,07,08,09,0A,0B,0C,0D,0E,0F,10,11,12,13,14,15,16,17
	05	R206		----------	NRSA6AJ-100W	MG RESISTOR	(Addition)	1	01,02,03,04,05,06,07,08,09,0A,0B,0C,0D,0E,0F,10,11,12,13,14,15,16,17
	05	R207		----------	NRSA6AJ-101W	MG RESISTOR	(Addition)	1	01,02,03,04,05,06,07,08,09,0A,0B,0C,0D,0E,0F,10,11,12,13,14,15,16,17
	05	R209		----------	NRSA6AJ-100W	MG RESISTOR	(Addition)	1	01,02,03,04,05,06,07,08,09,0A,0B,0C,0D,0E,0F,10,11,12,13,14,15,16,17
	05	R210		----------	NRSA6AJ-105W	MG RESISTOR	(Addition)	1	01,02,03,04,05,06,07,08,09,0A,0B,0C,0D,0E,0F,10,11,12,13,14,15,16,17
	05	R211		----------	NRSA6AJ-750W	MG RESISTOR	(Addition)	1	01,02,03,04,05,06,07,08,09,0A,0B,0C,0D,0E,0F,10,11,12,13,14,15,16,17
	05	R212		----------	NRSA6AJ-103W	MG RESISTOR	(Addition)	1	01,02,03,04,05,06,07,08,09,0A,0B,0C,0D,0E,0F,10,11,12,13,14,15,16,17
	05	R217		----------	NRSA6AJ-471W	MG RESISTOR	(Addition)	1	01,02,03,04,05,06,07,08,09,0A,0B,0C,0D,0E,0F,10,11,12,13,14,15,16,17
	05	R218		----------	NRSA6AJ-471W	MG RESISTOR	(Addition)	1	01,02,03,04,05,06,07,08,09,0A,0B,0C,0D,0E,0F,10,11,12,13,14,15,16,17
	05	R219		----------	NRSA6AJ-104W	MG RESISTOR	(Addition)	1	01,02,03,04,05,06,07,08,09,0A,0B,0C,0D,0E,0F,10,11,12,13,14,15,16,17
	05	R220		----------	NRSA6AJ-104W	MG RESISTOR	(Addition)	1	01,02,03,04,05,06,07,08,09,0A,0B,0C,0D,0E,0F,10,11,12,13,14,15,16,17
	05	R221		----------	NRSA63J-390X	MG RESISTOR	(Addition)	1	01,02,03,04,05,06,07,08,09,0A,0B,0C,0D,0E,0F,10,11,12,13,14,15,16,17
	05	R223		----------	NRS181J-0R0X	MG RESISTOR	(Addition)	1	01,02,03,04,05,06,07,08,09,0A,0B,0C,0D,0E,0F,10,11,12,13,14,15,16,17
	05	R225		----------	NRSA63J-332X	MG RESISTOR	(Addition)	1	01,02,03,04,05,06,07,08,09,0A,0B,0C,0D,0E,0F,10,11,12,13,14,15,16,17
	05	R226		----------	NRSA63J-181X	MG RESISTOR	(Addition)	1	01,02,03,04,05,06,07,08,09,0A,0B,0C,0D,0E,0F,10,11,12,13,14,15,16,17
	05	R227		----------	NRSA6AJ-100W	MG RESISTOR	(Addition)	1	01,02,03,04,05,06,07,08,09,0A,0B,0C,0D,0E,0F,10,11,12,13,14,15,16,17
	05	R240		----------	NRSA6AJ-101W	MG RESISTOR	(Addition)	1	01,02,03,04,05,06,07,08,09,0A,0B,0C,0D,0E,0F,10,11,12,13,14,15,16,17
	05	R252		----------	NRSA6AJ-101W	MG RESISTOR	(Addition)	1	01,0A,0B,0C,0D,0E,0F,10,11,12,13,14,15,16,17
	05	R253		----------	NRSA6AJ-102W	MG RESISTOR	(Addition)	1	01,0A,0B,0C,0D,0E,0F,10,11,12,13,14,15,16,17
	05	R254		----------	NRSA6AJ-222W	MG RESISTOR	(Addition)	1	01,0A,0B,0C,0D,0E,0F,10,11,12,13,14,15,16,17
	05	R301		----------	NRSA6AJ-222W	MG RESISTOR	(Addition)	1	01,02,03,04,05,06,07,08,09,0A,0B,0C,0D,0E,0F,10,11,12,13,14,15,16,17
	05	R302		----------	NRSA6AJ-100W	MG RESISTOR	(Addition)	1	01,02,03,04,05,06,07,08,09,0A,0B,0C,0D,0E,0F,10,11,12,13,14,15,16,17
	05	R303		----------	NRSA6AJ-273W	MG RESISTOR	(Addition)	1	01,02,03,04,05,06,07,08,09,0A,0B,0C,0D,0E,0F,10,11,12,13,14,15,16,17
	05	R311		----------	NRSA6AJ-561W	MG RESISTOR	(Addition)	1	01,0A,0B,0C,0D,0E,0F,10,11,12,13,14,15,16,17
	05	R311		----------	NRSA6AJ-0R0W	MG RESISTOR	(Addition)	1	02,03,04,05,06,07,08,09

⚠	Symbol		or	Part No. <Rev.001>	Part No. <Rev.002>	Part Name	Description	Qty	Models
	05	R312		----------	NRSA6AJ-561W	MG RESISTOR	(Addition)	1	01,0A,0B,0C,0D,0E,0F,10,11,12,13,14,15,16,17
	05	R312		----------	NRSA6AJ-0R0W	MG RESISTOR	(Addition)	1	02,03,04,05,06,07,08,09
	05	R317		----------	NRSA6AJ-101W	MG RESISTOR	(Addition)	1	01,02,03,04,05,06,07,08,09,0A,0B,0C,0D,0E,0F,10,11,12,13,14,15,16,17
	05	R321		----------	NRSA6AJ-561W	MG RESISTOR	(Addition)	1	01,0A,0B,0C,0D,0E,0F,10,11,12,13,14,15,16,17
	05	R321		----------	NRSA6AJ-0R0W	MG RESISTOR	(Addition)	1	02,03,04,05,06,07,08,09
	05	R322		----------	NRSA6AJ-561W	MG RESISTOR	(Addition)	1	01,0A,0B,0C,0D,0E,0F,10,11,12,13,14,15,16,17
	05	R322		----------	NRSA6AJ-0R0W	MG RESISTOR	(Addition)	1	02,03,04,05,06,07,08,09
	05	R327		----------	NRSA6AJ-101W	MG RESISTOR	(Addition)	1	01,02,03,04,05,06,07,08,09,0A,0B,0C,0D,0E,0F,10,11,12,13,14,15,16,17
	05	R331		----------	NRSA63J-561X	MG RESISTOR	(Addition)	1	01,0A,0B,0C,0D,0E,0F,10,11,12,13,14,15,16,17
	05	R331		----------	NRSA63J-0R0X	MG RESISTOR	(Addition)	1	02,03,04,05,06,07,08,09
	05	R332		----------	NRSA6AJ-561W	MG RESISTOR	(Addition)	1	01,0A,0B,0C,0D,0E,0F,10,11,12,13,14,15,16,17
	05	R332		----------	NRSA6AJ-0R0W	MG RESISTOR	(Addition)	1	02,03,04,05,06,07,08,09
	05	R337		----------	NRSA6AJ-101W	MG RESISTOR	(Addition)	1	01,02,03,04,05,06,07,08,09,0A,0B,0C,0D,0E,0F,10,11,12,13,14,15,16,17
	05	R341		----------	NRSA6AJ-561W	MG RESISTOR	(Addition)	1	01,0A,0B,0C,0D,0E,0F,10,11,12,13,14,15,16,17
	05	R341		----------	NRSA6AJ-0R0W	MG RESISTOR	(Addition)	1	02,03,04,05,06,07,08,09
	05	R342		----------	NRSA6AJ-561W	MG RESISTOR	(Addition)	1	01,0A,0B,0C,0D,0E,0F,10,11,12,13,14,15,16,17
	05	R342		----------	NRSA6AJ-0R0W	MG RESISTOR	(Addition)	1	02,03,04,05,06,07,08,09
	05	R343		----------	NRSA6AJ-473W	MG RESISTOR	(Addition)	1	01,02,03,04,05,06,07,08,09,0A,0B,0C,0D,0E,0F,10,11,12,13,14,15,16,17
	05	R344		----------	NRSA6AJ-222W	MG RESISTOR	(Addition)	1	01,02,03,04,05,06,07,08,09,0A,0B,0C,0D,0E,0F,10,11,12,13,14,15,16,17
	05	R345		----------	NRSA6AJ-102W	MG RESISTOR	(Addition)	1	01,02,03,04,05,06,07,08,09,0A,0B,0C,0D,0E,0F,10,11,12,13,14,15,16,17
	05	R346		----------	NRSA6AJ-101W	MG RESISTOR	(Addition)	1	01,02,03,04,05,06,07,08,09,0A,0B,0C,0D,0E,0F,10,11,12,13,14,15,16,17
	05	R347		----------	NRSA6AJ-101W	MG RESISTOR	(Addition)	1	01,02,03,04,05,06,07,08,09,0A,0B,0C,0D,0E,0F,10,11,12,13,14,15,16,17
	05	R348		----------	NQR0286-010X	MG RESISTOR	(Addition)	1	01,0A,0B,0C,0D,0E,0F,10,11,12,13,14,15,16,17
	05	R348		----------	NRSA6AJ-0R0W	MG RESISTOR	(Addition)	1	02,03,04,05,06,07,08,09
	05	R353		----------	NRSA6AJ-473W	MG RESISTOR	(Addition)	1	01,02,03,04,05,06,07,08,09,0A,0B,0C,0D,0E,0F,10,11,12,13,14,15,16,17
	05	R354		----------	NRSA6AJ-222W	MG RESISTOR	(Addition)	1	01,02,03,04,05,06,07,08,09,0A,0B,0C,0D,0E,0F,10,11,12,13,14,15,16,17
	05	R355		----------	NRSA6AJ-102W	MG RESISTOR	(Addition)	1	01,02,03,04,05,06,07,08,09,0A,0B,0C,0D,0E,0F,10,11,12,13,14,15,16,17
	05	R356		----------	NRSA6AJ-101W	MG RESISTOR	(Addition)	1	01,02,03,04,05,06,07,08,09,0A,0B,0C,0D,0E,0F,10,11,12,13,14,15,16,17
	05	R358		----------	NQR0286-010X	MG RESISTOR	(Addition)	1	01,0A,0B,0C,0D,0E,0F,10,11,12,13,14,15,16,17
	05	R358		----------	NRSA6AJ-0R0W	MG RESISTOR	(Addition)	1	02,03,04,05,06,07,08,09
	05	R401		----------	NRSA6AJ-271W	MG RESISTOR	(Addition)	1	01,02,03,04,05,06,07,08,09,0A,0B,0C,0D,0E,0F,10,11,12,13,14,15,16,17
	05	R402		----------	NRSA6AJ-0R0W	MG RESISTOR	(Addition)	1	01,02,03,04,05,06,07,08,09,0A,0B,0C,0D,0E,0F,10,11,12,13,14,15,16,17
	05	R411		----------	NRSA6AJ-103W	MG RESISTOR	(Addition)	1	01,02,03,04,05,06,07,08,09,0A,0B,0C,0D,0E,0F,10,11,12,13,14,15,16,17
	05	R421		----------	NRSA6AJ-473W	MG RESISTOR	(Addition)	1	01,02,03,04,05,06,07,08,09,0A,0B,0C,0D,0E,0F,10,11,12,13,14,15,16,17
	05	R422		----------	NRSA6AJ-472W	MG RESISTOR	(Addition)	1	01,02,03,04,05,06,07,08,09,0A,0B,0C,0D,0E,0F,10,11,12,13,14,15,16,17
	05	R423		----------	NRSA6AJ-103W	MG RESISTOR	(Addition)	1	01,02,03,04,05,06,07,08,09,0A,0B,0C,0D,0E,0F,10,11,12,13,14,15,16,17
	05	R431		----------	NRSA6AJ-220W	MG RESISTOR	(Addition)	1	01,02,03,04,05,06,07,08,09,0A,0B,0C,0D,0E,0F,10,11,12,13,14,15,16,17
	05	R432		----------	NRSA6AJ-220W	MG RESISTOR	(Addition)	1	01,02,03,04,05,06,07,08,09,0A,0B,0C,0D,0E,0F,10,11,12,13,14,15,16,17
	05	R433		----------	NRSA6AJ-471W	MG RESISTOR	(Addition)	1	01,02,03,04,05,06,07,08,09,0A,0B,0C,0D,0E,0F,10,11,12,13,14,15,16,17

⚠	Symbol		or	Part No. <Rev.001>	Part No. <Rev.002>	Part Name	Description	Qty	Models
	05	R435		----------	NRSA6AJ-472W	MG RESISTOR	(Addition)	1	01,02,03,04,05,06,07,08,09,0A,0B,0C,0D,0E,0F,10,11,12,13,14,15,16,17
	05	R441		----------	NRSA6AJ-103W	MG RESISTOR	(Addition)	1	01,02,03,04,05,06,07,08,09,0A,0B,0C,0D,0E,0F,10,11,12,13,14,15,16,17
	05	R445		----------	NRS181J-0R0X	MG RESISTOR	(Addition)	1	01,02,03,04,05,06,07,08,09,0A,0B,0C,0D,0E,0F,10,11,12,13,14,15,16,17
	05	R446		----------	NRSA63J-0R0X	MG RESISTOR	(Addition)	1	01,02,03,04,05,06,07,08,09,0A,0B,0C,0D,0E,0F,10,11,12,13,14,15,16,17
	05	R447		----------	NRSA63J-0R0X	MG RESISTOR	(Addition)	1	01,02,03,04,05,06,07,08,09,0A,0B,0C,0D,0E,0F,10,11,12,13,14,15,16,17
	05	R448		----------	NRSA63J-0R0X	MG RESISTOR	(Addition)	1	01,02,03,04,05,06,07,08,09,0A,0B,0C,0D,0E,0F,10,11,12,13,14,15,16,17
	05	R582		----------	NRSA63J-203X	MG RESISTOR	(Addition)	1	01,02,03,04,05,06,07,08,09,0A,0B,0C,0D,0E,0F,10,11,12,13,14,15,16,17
	05	R583		----------	NRSA63J-203X	MG RESISTOR	(Addition)	1	01,02,03,04,05,06,07,08,09,0A,0B,0C,0D,0E,0F,10,11,12,13,14,15,16,17
	05	R584		----------	NQR0360-001X	FERRITE BEADS	(Addition)	1	01,0A,0B,0C,0D,0E,0F,10,11,12,13,14,15,16,17
	05	R584		----------	NRSA63J-0R0X	MG RESISTOR	(Addition)	1	02,03,04,05,06,07,08,09
	05	R585		----------	NRSA63J-243X	MG RESISTOR	(Addition)	1	01,02,03,04,05,06,07,08,09,0A,0B,0C,0D,0E,0F,10,11,12,13,14,15,16,17
	05	R586		----------	NRSA6AJ-472W	MG RESISTOR	(Addition)	1	01,02,03,04,05,06,07,08,09,0A,0B,0C,0D,0E,0F,10,11,12,13,14,15,16,17
	05	R587		----------	NRSA6AJ-472W	MG RESISTOR	(Addition)	1	01,02,03,04,05,06,07,08,09,0A,0B,0C,0D,0E,0F,10,11,12,13,14,15,16,17
	05	R588		----------	NRSA63J-472X	MG RESISTOR	(Addition)	1	01,02,03,04,05,06,07,08,09,0A,0B,0C,0D,0E,0F,10,11,12,13,14,15,16,17
	05	R589		----------	NRSA63J-472X	MG RESISTOR	(Addition)	1	01,02,03,04,05,06,07,08,09,0A,0B,0C,0D,0E,0F,10,11,12,13,14,15,16,17
	05	R591		----------	NQR0360-001X	FERRITE BEADS	(Addition)	1	01,0A,0B,0C,0D,0E,0F,10,11,12,13,14,15,16,17
	05	R591		----------	NRSA63J-0R0X	MG RESISTOR	(Addition)	1	02,03,04,05,06,07,08,09
	05	R592		----------	NRSA63J-203X	MG RESISTOR	(Addition)	1	01,02,03,04,05,06,07,08,09,0A,0B,0C,0D,0E,0F,10,11,12,13,14,15,16,17
	05	R593		----------	NRSA63J-203X	MG RESISTOR	(Addition)	1	01,02,03,04,05,06,07,08,09,0A,0B,0C,0D,0E,0F,10,11,12,13,14,15,16,17
	05	R594		----------	NQR0360-001X	FERRITE BEADS	(Addition)	1	01,0A,0B,0C,0D,0E,0F,10,11,12,13,14,15,16,17
	05	R594		----------	NRSA63J-0R0X	MG RESISTOR	(Addition)	1	02,03,04,05,06,07,08,09
	05	R595		----------	NRSA63J-243X	MG RESISTOR	(Addition)	1	01,02,03,04,05,06,07,08,09,0A,0B,0C,0D,0E,0F,10,11,12,13,14,15,16,17
	05	R596		----------	NRSA6AJ-472W	MG RESISTOR	(Addition)	1	01,02,03,04,05,06,07,08,09,0A,0B,0C,0D,0E,0F,10,11,12,13,14,15,16,17
	05	R597		----------	NRSA6AJ-472W	MG RESISTOR	(Addition)	1	01,02,03,04,05,06,07,08,09,0A,0B,0C,0D,0E,0F,10,11,12,13,14,15,16,17
	05	R598		----------	NRSA63J-472X	MG RESISTOR	(Addition)	1	01,02,03,04,05,06,07,08,09,0A,0B,0C,0D,0E,0F,10,11,12,13,14,15,16,17
	05	R599		----------	NRSA63J-472X	MG RESISTOR	(Addition)	1	01,02,03,04,05,06,07,08,09,0A,0B,0C,0D,0E,0F,10,11,12,13,14,15,16,17
	05	R701		----------	NRSA6AJ-0R0W	MG RESISTOR	(Addition)	1	01,02,03,04,05,06,07,08,09,0A,0B,0C,0D,0E,0F,10,11,12,13,14,15,16,17
	05	R702		----------	NRSA6AJ-0R0W	MG RESISTOR	(Addition)	1	02,03,04,05,06,07,08,09,0B,0C,11,15
	05	R703		----------	NRSA6AJ-222W	MG RESISTOR	(Addition)	1	01,02,03,04,05,06,07,08,09,0A,0B,0C,0D,0E,0F,10,11,12,13,14,15,16,17
	05	R704		----------	NRSA6AJ-102W	MG RESISTOR	(Addition)	1	01,02,03,04,05,06,07,08,09,0A,0B,0C,0D,0E,0F,10,11,12,13,14,15,16,17
	05	R705		----------	NRSA6AJ-102W	MG RESISTOR	(Addition)	1	01,02,03,04,05,06,07,08,09,0A,0B,0C,0D,0E,0F,10,11,12,13,14,15,16,17
	05	R706		----------	NRSA6AJ-102W	MG RESISTOR	(Addition)	1	01,02,03,04,05,06,07,08,09,0A,0B,0C,0D,0E,0F,10,11,12,13,14,15,16,17
	05	R707		----------	NRSA6AJ-101W	MG RESISTOR	(Addition)	1	01,02,03,04,05,06,07,08,09,0A,0B,0C,0D,0E,0F,10,11,12,13,14,15,16,17
	05	R709		----------	NRSA6AJ-0R0W	MG RESISTOR	(Addition)	1	02,03,04,05,06,07,08,09,0B,0C,11,15
	05	R710		----------	NRSA6AJ-221W	MG RESISTOR	(Addition)	1	01,02,03,04,05,06,07,08,09,0A,0B,0C,0D,0E,0F,10,11,12,13,14,15,16,17
	05	R711		----------	NRSA6AJ-221W	MG RESISTOR	(Addition)	1	01,02,03,04,05,06,07,08,09,0A,0B,0C,0D,0E,0F,10,11,12,13,14,15,16,17
	05	R712		----------	NRSA63J-472X	MG RESISTOR	(Addition)	1	01,02,03,04,05,06,07,08,09,0A,0B,0C,0D,0E,0F,10,11,12,13,14,15,16,17
	05	R714		----------	NRSA6AJ-472W	MG RESISTOR	(Addition)	1	01,02,03,04,05,06,07,08,09,0A,0B,0C,0D,0E,0F,10,11,12,13,14,15,16,17

⚠	Symbol		or	Part No. <Rev.001>	Part No. <Rev.002>	Part Name	Description	Qty	Models
	05	R715		----------	NRSA6AJ-271W	MG RESISTOR	(Addition)	1	01,02,03,04,05,06,07,08,09,0A,0B,0C,0D,0E,0F,10,11,12,13,14,15,16,17
	05	R716		----------	NRSA6AJ-271W	MG RESISTOR	(Addition)	1	01,02,03,04,05,06,07,08,09,0A,0B,0C,0D,0E,0F,10,11,12,13,14,15,16,17
	05	R717		----------	NRSA6AJ-101W	MG RESISTOR	(Addition)	1	01,02,03,04,05,06,07,08,09,0A,0B,0C,0D,0E,0F,10,11,12,13,14,15,16,17
	05	R718		----------	NRSA6AJ-102W	MG RESISTOR	(Addition)	1	01,02,03,04,05,06,07,08,09,0A,0B,0C,0D,0E,0F,10,11,12,13,14,15,16,17
	05	R719		----------	NRSA6AJ-222W	MG RESISTOR	(Addition)	1	01,02,03,04,05,06,07,08,09,0A,0B,0C,0D,0E,0F,10,11,12,13,14,15,16,17
	05	R720		----------	NRSA63J-473X	MG RESISTOR	(Addition)	1	01,02,03,04,05,06,07,08,09,0A,0B,0C,0D,0E,0F,10,11,12,13,14,15,16,17
	05	R721		----------	NRSA63J-473X	MG RESISTOR	(Addition)	1	01,02,03,04,05,06,07,08,09,0A,0B,0C,0D,0E,0F,10,11,12,13,14,15,16,17
	05	R722		----------	NRSA6AJ-471W	MG RESISTOR	(Addition)	1	01,02,03,04,05,06,07,08,09,0A,0B,0C,0D,0E,0F,10,11,12,13,14,15,16,17
	05	R723		----------	NRSA6AJ-103W	MG RESISTOR	(Addition)	1	01,02,03,04,05,06,07,08,09,0A,0B,0C,0D,0E,0F,10,11,12,13,14,15,16,17
	05	R724		----------	NRSA6AJ-103W	MG RESISTOR	(Addition)	1	01,02,03,04,05,06,07,08,09,0A,0B,0C,0D,0E,0F,10,11,12,13,14,15,16,17
	05	R725		----------	NRSA63J-0R0X	MG RESISTOR	(Addition)	1	01,02,03,04,05,06,07,08,09,0A,0B,0C,0D,0E,0F,10,11,12,13,14,15,16,17
	05	R726		----------	NRSA63J-163X	MG RESISTOR	(Addition)	1	01,02,03,04,05,06,07,08,09,0A,0B,0C,0D,0E,0F,10,11,12,13,14,15,16,17
	05	R728		----------	NRSA6AJ-472W	MG RESISTOR	(Addition)	1	01,02,03,04,05,06,07,08,09,0A,0B,0C,0D,0E,0F,10,11,12,13,14,15,16,17
	05	R730		----------	NRSA6AJ-102W	MG RESISTOR	(Addition)	1	01,02,03,04,05,06,07,08,09,0A,0B,0C,0D,0E,0F,10,11,12,13,14,15,16,17
	05	R731		----------	NRSA6AJ-102W	MG RESISTOR	(Addition)	1	01,02,03,04,05,06,07,08,09,0A,0B,0C,0D,0E,0F,10,11,12,13,14,15,16,17
	05	R734		----------	NRSA6AJ-473W	MG RESISTOR	(Addition)	1	01,02,03,04,05,06,07,08,09,0A,0B,0C,0D,0E,0F,10,11,12,13,14,15,16,17
	05	R735		----------	NRSA6AJ-473W	MG RESISTOR	(Addition)	1	01,02,03,04,05,06,07,08,09,0A,0B,0C,0D,0E,0F,10,11,12,13,14,15,16,17
	05	R736		----------	NRSA6AJ-222W	MG RESISTOR	(Addition)	1	01,0A,0B,0C
	05	R737		----------	NRSA6AJ-223W	MG RESISTOR	(Addition)	1	01,0A,0B,0C
	05	R738		----------	NRSA6AJ-472W	MG RESISTOR	(Addition)	1	01,02,03,04,05,06,07,08,09,0A,0B,0C,0D,0E,0F,10,11,12,13,14,15,16,17
	05	R739		----------	NRSA6AJ-102W	MG RESISTOR	(Addition)	1	01,02,03,04,05,06,07,08,09,0A,0B,0C,0D,0E,0F,10,11,12,13,14,15,16,17
	05	R743		----------	NRSA6AJ-472W	MG RESISTOR	(Addition)	1	01,02,03,04,05,06,07,08,09,0A,0B,0C,0D,0E,0F,10,11,12,13,14,15,16,17
	05	R744		----------	NRSA6AJ-472W	MG RESISTOR	(Addition)	1	01,02,03,04,05,06,07,08,09,0A,0B,0C,0D,0E,0F,10,11,12,13,14,15,16,17
	05	R746		----------	NRSA6AJ-103W	MG RESISTOR	(Addition)	1	01,0B,0C,0D,0E,0F,10,12,13,14,16,17
	05	R747		----------	NRSA6AJ-103W	MG RESISTOR	(Addition)	1	0A,0C,0D,0E,0F,10,11,12,13,14,15,16,17
	05	R748		----------	NRSA6AJ-102W	MG RESISTOR	(Addition)	1	01,02,03,04,05,06,07,08,09,0A,0B,0C,0D,0E,0F,10,11,12,13,14,15,16,17
	05	R749		----------	NRSA6AJ-102W	MG RESISTOR	(Addition)	1	01,02,03,04,05,06,07,08,09,0A,0B,0C,0D,0E,0F,10,11,12,13,14,15,16,17
	05	R750		----------	NRSA6AJ-102W	MG RESISTOR	(Addition)	1	01,02,03,04,05,06,07,08,09,0A,0B,0C,0D,0E,0F,10,11,12,13,14,15,16,17
	05	R751		----------	NRSA6AJ-102W	MG RESISTOR	(Addition)	1	01,02,03,04,05,06,07,08,09,0A,0B,0C,0D,0E,0F,10,11,12,13,14,15,16,17
	05	R752		----------	NRSA6AJ-222W	MG RESISTOR	(Addition)	1	02,03,04,05,06,07,08,09,0D,0E,0F,10,11,12,13,14,15,16,17
	05	R753		----------	NRSA6AJ-223W	MG RESISTOR	(Addition)	1	01,02,03,04,05,06,07,08,09,0A,0B,0C,0D,0E,0F,10,11,12,13,14,15,16,17
	05	R754		----------	NRSA6AJ-102W	MG RESISTOR	(Addition)	1	01,02,03,04,05,06,07,08,09,0A,0B,0C,0D,0E,0F,10,11,12,13,14,15,16,17
	05	R755		----------	NRSA6AJ-102W	MG RESISTOR	(Addition)	1	01,02,03,04,05,06,07,08,09,0A,0B,0C,0D,0E,0F,10,11,12,13,14,15,16,17
	05	R756		----------	NRSA6AJ-102W	MG RESISTOR	(Addition)	1	01,02,03,04,05,06,07,08,09,0A,0B,0C,0D,0E,0F,10,11,12,13,14,15,16,17
	05	R757		----------	NRSA63J-473X	MG RESISTOR	(Addition)	1	01,02,03,04,05,06,07,08,09,0A,0B,0C,0D,0E,0F,10,11,12,13,14,15,16,17
	05	R758		----------	NRSA6AJ-0R0W	MG RESISTOR	(Addition)	1	01,02,03,04,05,06,07,08,09,0A,0B,0C,0D,0E,0F,10,11,12,13,14,15,16,17
	05	R759		----------	NRSA6AJ-271W	MG RESISTOR	(Addition)	1	01,02,03,04,05,06,07,08,09,0A,0B,0C,0D,0E,0F,10,11,12,13,14,15,16,17

⚠	Symbol		or	Part No. <Rev.001>	Part No. <Rev.002>	Part Name	Description	Qty	Models
	05	R760		----------	NRSA6AJ-271W	MG RESISTOR	(Addition)	1	01,02,03,04,05,06,07,08,09,0A,0B,0C,0D,0E,0F,10,11,12,13,14,15,16,17
	05	R763		----------	NRSA6AJ-103W	MG RESISTOR	(Addition)	1	01,02,03,04,05,06,07,08,09,0A,0B,0C,0D,0E,0F,10,11,12,13,14,15,16,17
	05	R764		----------	NRSA6AJ-473W	MG RESISTOR	(Addition)	1	01,02,03,04,05,06,07,08,09,0A,0B,0C,0D,0E,0F,10,11,12,13,14,15,16,17
	05	R771		----------	NRS181J-0R0X	MG RESISTOR	(Addition)	1	01,02,03,04,05,06,07,08,09,0A,0B,0C,0D,0E,0F,10,11,12,13,14,15,16,17
	05	R773		----------	NRZ0084-0R0X	MG RESISTOR	(Addition)	1	01,02,03,04,05,06,07,08,09,0A,0B,0C,0D,0E,0F,10,11,12,13,14,15,16,17
	05	R775		----------	NRSA63J-0R0X	MG RESISTOR	(Addition)	1	01,02,03,04,05,06,07,08,09,0A,0B,0C,0D,0E,0F,10,11,12,13,14,15,16,17
	05	R776		----------	NRSA63J-0R0X	MG RESISTOR	(Addition)	1	01,02,03,04,05,06,07,08,09,0A,0B,0C,0D,0E,0F,10,11,12,13,14,15,16,17
	05	R777		----------	NRS181J-0R0X	MG RESISTOR	(Addition)	1	01,02,03,04,05,06,07,08,09,0A,0B,0C,0D,0E,0F,10,11,12,13,14,15,16,17
	05	R778		----------	NRS181J-0R0X	MG RESISTOR	(Addition)	1	01,02,03,04,05,06,07,08,09,0A,0B,0C,0D,0E,0F,10,11,12,13,14,15,16,17
	05	R781		----------	NRSA6AJ-471W	MG RESISTOR	(Addition)	1	01,02,03,04,05,06,07,08,09,0A,0B,0C,0D,0E,0F,10,11,12,13,14,15,16,17
	05	R783		----------	NRSA6AJ-471W	MG RESISTOR	(Addition)	1	01,02,03,04,05,06,07,08,09,0A,0B,0C,0D,0E,0F,10,11,12,13,14,15,16,17
	05	R784		----------	NRSA63J-0R0X	MG RESISTOR	(Addition)	1	01,02,03,04,05,06,07,08,09,0A,0B,0C,0D,0E,0F,10,11,12,13,14,15,16,17
	05	R785		----------	NRSA6AJ-473W	MG RESISTOR	(Addition)	1	01,02,03,04,05,06,07,08,09,0A,0B,0C,0D,0E,0F,10,11,12,13,14,15,16,17
	05	R786		----------	NRSA6AJ-101W	MG RESISTOR	(Addition)	1	01,02,03,04,05,06,07,08,09,0A,0B,0C,0D,0E,0F,10,11,12,13,14,15,16,17
	05	R787		----------	NRSA6AJ-473W	MG RESISTOR	(Addition)	1	01,02,03,04,05,06,07,08,09,0A,0B,0C,0D,0E,0F,10,11,12,13,14,15,16,17
	05	R788		----------	NRSA6AJ-471W	MG RESISTOR	(Addition)	1	01,02,03,04,05,06,07,08,09,0A,0B,0C,0D,0E,0F,10,11,12,13,14,15,16,17
	05	R789		----------	NRSA6AJ-472W	MG RESISTOR	(Addition)	1	01,02,03,04,05,06,07,08,09,0A,0B,0C,0D,0E,0F,10,11,12,13,14,15,16,17
	05	R794		----------	NRSA6AJ-102W	MG RESISTOR	(Addition)	1	01,02,03,04,05,06,07,08,09,0A,0B,0C,0D,0E,0F,10,11,12,13,14,15,16,17
	05	R796		----------	NRSA6AJ-103W	MG RESISTOR	(Addition)	1	01,02,03,04,05,06,07,08,09,0A,0B,0C,0D,0E,0F,10,11,12,13,14,15,16,17
	05	R801		----------	NRSA6AJ-392W	MG RESISTOR	(Addition)	1	01,02,03,04,05,06,07,08,09,0A,0B,0C,0D,0E,0F,10,11,12,13,14,15,16,17
	05	R802		----------	NRSA6AJ-682W	MG RESISTOR	(Addition)	1	01,02,03,04,05,06,07,08,09,0A,0B,0C,0D,0E,0F,10,11,12,13,14,15,16,17
	05	R803		----------	NRSA6AJ-104W	MG RESISTOR	(Addition)	1	01,02,03,04,05,06,07,08,09,0A,0B,0C,0D,0E,0F,10,11,12,13,14,15,16,17
	05	R804		----------	NRSA6AJ-103W	MG RESISTOR	(Addition)	1	01,02,03,04,05,06,07,08,09,0A,0B,0C,0D,0E,0F,10,11,12,13,14,15,16,17
	05	R805		----------	NRSA6AJ-101W	MG RESISTOR	(Addition)	1	01,02,03,04,05,06,07,08,09,0A,0B,0C,0D,0E,0F,10,11,12,13,14,15,16,17
	05	R806		----------	NRSA6AJ-473W	MG RESISTOR	(Addition)	1	01,02,03,04,05,06,07,08,09,0A,0B,0C,0D,0E,0F,10,11,12,13,14,15,16,17
	05	R807		----------	NRSA6AJ-392W	MG RESISTOR	(Addition)	1	01,02,03,04,05,06,07,08,09,0A,0B,0C,0D,0E,0F,10,11,12,13,14,15,16,17
	05	R808		----------	NRSA6AJ-682W	MG RESISTOR	(Addition)	1	01,02,03,04,05,06,07,08,09,0A,0B,0C,0D,0E,0F,10,11,12,13,14,15,16,17
	05	R809		----------	NRSA6AJ-103W	MG RESISTOR	(Addition)	1	01,02,03,04,05,06,07,08,09,0A,0B,0C,0D,0E,0F,10,11,12,13,14,15,16,17
	05	R810		----------	NRSA6AJ-101W	MG RESISTOR	(Addition)	1	01,02,03,04,05,06,07,08,09,0A,0B,0C,0D,0E,0F,10,11,12,13,14,15,16,17
	05	R811		----------	NRSA6AJ-473W	MG RESISTOR	(Addition)	1	01,02,03,04,05,06,07,08,09,0A,0B,0C,0D,0E,0F,10,11,12,13,14,15,16,17
	05	R812		----------	NRSA6AJ-104W	MG RESISTOR	(Addition)	1	01,02,03,04,05,06,07,08,09,0A,0B,0C,0D,0E,0F,10,11,12,13,14,15,16,17
	05	R814		----------	NRSA6AJ-101W	MG RESISTOR	(Addition)	1	01,02,03,04,05,06,07,08,09,0A,0B,0C,0D,0E,0F,10,11,12,13,14,15,16,17
	05	R815		----------	NRSA6AJ-151W	MG RESISTOR	(Addition)	1	01,02,03,04,05,06,07,08,09,0A,0B,0C,0D,0E,0F,10,11,12,13,14,15,16,17
	05	R816		----------	NRSA6AJ-151W	MG RESISTOR	(Addition)	1	01,02,03,04,05,06,07,08,09,0A,0B,0C,0D,0E,0F,10,11,12,13,14,15,16,17
	05	R841		----------	NRSA02J-911X	MG RESISTOR	(Addition)	1	01,02,03,04,05,06,07,08,09,0A,0B,0C,0D,0E,0F,10,11,12,13,14,15,16,17

⚠	Symbol		or	Part No. <Rev.001>	Part No. <Rev.002>	Part Name	Description	Qty	Models
	05	R851		----------	NRSA63J-103X	MG RESISTOR	(Addition)	1	01,02,03,04,06,07,09,0A,0D,0E,0F,10,12,13,14,16,17
	05	R881		----------	NRSA6AJ-473W	MG RESISTOR	(Addition)	1	01,02,03,04,05,06,07,08,09,0A,0B,0C,0D,0E,0F,10,11,12,13,14,15,16,17
	05	R882		----------	NRSA6AJ-103W	MG RESISTOR	(Addition)	1	01,02,03,04,05,06,07,08,09,0A,0B,0C,0D,0E,0F,10,11,12,13,14,15,16,17
	05	R883		----------	NRSA6AJ-104W	MG RESISTOR	(Addition)	1	01,02,03,04,05,06,07,08,09,0A,0B,0C,0D,0E,0F,10,11,12,13,14,15,16,17
	05	R891		----------	NRSA63J-473X	MG RESISTOR	(Addition)	1	01,02,03,04,05,06,07,08,09,0A,0B,0C,0D,0E,0F,10,11,12,13,14,15,16,17
	05	R892		----------	NRSA6AJ-102W	MG RESISTOR	(Addition)	1	01,02,03,04,05,06,07,08,09,0A,0B,0C,0D,0E,0F,10,11,12,13,14,15,16,17
	05	R903		----------	QRE142J-102X	C RESISTOR	(Addition)	1	01,02,03,04,05,06,07,08,09,0A,0B,0C,0D,0E,0F,10,11,12,13,14,15,16,17
	05	R905		----------	NRSA63J-472X	MG RESISTOR	(Addition)	1	01,02,03,04,05,06,07,08,09,0A,0B,0C,0D,0E,0F,10,11,12,13,14,15,16,17
	05	R906		----------	NRSA63J-912X	MG RESISTOR	(Addition)	1	01,02,03,04,05,06,07,08,09,0A,0B,0C,0D,0E,0F,10,11,12,13,14,15,16,17
	05	R907		----------	NRSA6AJ-333W	MG RESISTOR	(Addition)	1	01,02,03,04,05,06,07,08,09,0A,0B,0C,0D,0E,0F,10,11,12,13,14,15,16,17
	05	R908		----------	NRSA6AJ-473W	MG RESISTOR	(Addition)	1	01,02,03,04,05,06,07,08,09,0A,0B,0C,0D,0E,0F,10,11,12,13,14,15,16,17
	05	R913		----------	NRSA6AJ-103W	MG RESISTOR	(Addition)	1	01,02,03,04,05,06,07,08,09,0A,0B,0C,0D,0E,0F,10,11,12,13,14,15,16,17
	05	R916		----------	NRS181J-0R0X	MG RESISTOR	(Addition)	1	01,02,03,04,05,06,07,08,09,0A,0B,0C,0D,0E,0F,10,11,12,13,14,15,16,17
	05	R921		----------	NRSA6AJ-122W	MG RESISTOR	(Addition)	1	01,02,03,04,05,06,07,08,09,0A,0B,0C,0D,0E,0F,10,11,12,13,14,15,16,17
	05	R924		----------	NRSA6AJ-121W	MG RESISTOR	(Addition)	1	01,02,03,04,05,06,07,08,09,0A,0B,0C,0D,0E,0F,10,11,12,13,14,15,16,17
	05	R925		----------	NRSA6AJ-333W	MG RESISTOR	(Addition)	1	01,02,03,04,05,06,07,08,09,0A,0B,0C,0D,0E,0F,10,11,12,13,14,15,16,17
	05	R926		----------	NRSA6AJ-333W	MG RESISTOR	(Addition)	1	01,02,03,04,05,06,07,08,09,0A,0B,0C,0D,0E,0F,10,11,12,13,14,15,16,17
	05	R927		----------	NRSA6AJ-823W	MG RESISTOR	(Addition)	1	01,02,03,04,05,06,07,08,09,0A,0B,0C,0D,0E,0F,10,11,12,13,14,15,16,17
	05	R928		----------	NRSA6AJ-563W	MG RESISTOR	(Addition)	1	01,02,03,04,05,06,07,08,09,0A,0B,0C,0D,0E,0F,10,11,12,13,14,15,16,17
	05	R929		----------	NRSA6AJ-333W	MG RESISTOR	(Addition)	1	01,02,03,04,05,06,07,08,09,0A,0B,0C,0D,0E,0F,10,11,12,13,14,15,16,17
	05	R930		----------	NRSA6AJ-683W	MG RESISTOR	(Addition)	1	01,02,03,04,05,06,07,08,09,0A,0B,0C,0D,0E,0F,10,11,12,13,14,15,16,17
	05	R931		----------	NRSA6AJ-333W	MG RESISTOR	(Addition)	1	01,02,03,04,05,06,07,08,09,0A,0B,0C,0D,0E,0F,10,11,12,13,14,15,16,17
	05	R932		----------	NRSA6AJ-563W	MG RESISTOR	(Addition)	1	01,02,03,04,05,06,07,08,09,0A,0B,0C,0D,0E,0F,10,11,12,13,14,15,16,17
	05	R933		----------	NRSA6AJ-392W	MG RESISTOR	(Addition)	1	01,02,03,04,05,06,07,08,09,0A,0B,0C,0D,0E,0F,10,11,12,13,14,15,16,17
	05	R934		----------	NRSA6AJ-0R0W	MG RESISTOR	(Addition)	1	01,02,03,04,05,06,07,08,09,0A,0B,0C,0D,0E,0F,10,11,12,13,14,15,16,17
	05	R935		----------	NRSA6AJ-471W	MG RESISTOR	(Addition)	1	01,02,03,04,05,06,07,08,09,0A,0B,0C,0D,0E,0F,10,11,12,13,14,15,16,17
	05	R936		----------	NRSA63J-471X	MG RESISTOR	(Addition)	1	01,02,03,04,05,06,07,08,09,0A,0B,0C,0D,0E,0F,10,11,12,13,14,15,16,17
	05	R937		----------	NRSA63J-5R6X	MG RESISTOR	(Addition)	1	01,02,03,04,05,06,07,08,09,0A,0B,0C,0D,0E,0F,10,11,12,13,14,15,16,17
	05	R938		----------	NRSA63J-821X	MG RESISTOR	(Addition)	1	01,02,03,04,05,06,07,08,09,0A,0B,0C,0D,0E,0F,10,11,12,13,14,15,16,17
	05	R939		----------	NRSA63J-821X	MG RESISTOR	(Addition)	1	01,02,03,04,05,06,07,08,09,0A,0B,0C,0D,0E,0F,10,11,12,13,14,15,16,17
	05	R940		----------	NRSA63J-821X	MG RESISTOR	(Addition)	1	01,02,03,04,05,06,07,08,09,0A,0B,0C,0D,0E,0F,10,11,12,13,14,15,16,17
	05	R941		----------	NRSA63J-821X	MG RESISTOR	(Addition)	1	01,02,03,04,05,06,07,08,09,0A,0B,0C,0D,0E,0F,10,11,12,13,14,15,16,17
	05	R942		----------	NRSA63J-0R0X	MG RESISTOR	(Addition)	1	01,02,03,04,05,06,07,08,09,0A,0B,0C,0D,0E,0F,10,11,12,13,14,15,16,17
	05	R943		----------	NRSA63J-332X	MG RESISTOR	(Addition)	1	01,02,03,04,05,06,07,08,09,0A,0B,0C,0D,0E,0F,10,11,12,13,14,15,16,17
	05	R944		----------	NRSA63J-470X	MG RESISTOR	(Addition)	1	01,02,03,04,05,06,07,08,09,0A,0B,0C,0D,0E,0F,10,11,12,13,14,15,16,17

⚠	Symbol		or	Part No. <Rev.001>	Part No. <Rev.002>	Part Name	Description	Qty	Models
	05	R945		----------	NRSA63J-102X	MG RESISTOR	(Addition)	1	01,02,03,04,05,06,07,08,09,0A,0B,0C, 0D,0E,0F,10,11,12,13,14,15,16,17
	05	R946		----------	NRSA6AJ-471W	MG RESISTOR	(Addition)	1	01,02,03,04,05,06,07,08,09,0A,0B,0C, 0D,0E,0F,10,11,12,13,14,15,16,17
	05	R947		----------	NRSA63J-471X	MG RESISTOR	(Addition)	1	01,02,03,04,05,06,07,08,09,0A,0B,0C, 0D,0E,0F,10,11,12,13,14,15,16,17
	05	R948		----------	NRSA63J-5R6X	MG RESISTOR	(Addition)	1	01,02,03,04,05,06,07,08,09,0A,0B,0C, 0D,0E,0F,10,11,12,13,14,15,16,17
	05	R949		----------	NRSA63J-821X	MG RESISTOR	(Addition)	1	01,02,03,04,05,06,07,08,09,0A,0B,0C, 0D,0E,0F,10,11,12,13,14,15,16,17
	05	R950		----------	NRSA63J-821X	MG RESISTOR	(Addition)	1	01,02,03,04,05,06,07,08,09,0A,0B,0C, 0D,0E,0F,10,11,12,13,14,15,16,17
	05	R951		----------	NRSA63J-821X	MG RESISTOR	(Addition)	1	01,02,03,04,05,06,07,08,09,0A,0B,0C, 0D,0E,0F,10,11,12,13,14,15,16,17
	05	R952		----------	NRSA63J-821X	MG RESISTOR	(Addition)	1	01,02,03,04,05,06,07,08,09,0A,0B,0C, 0D,0E,0F,10,11,12,13,14,15,16,17
	05	R953		----------	NRSA63D-621X	MG RESISTOR	(Addition)	1	01,02,03,04,05,06,07,08,09,0A,0B,0C, 0D,0E,0F,10,11,12,13,14,15,16,17
	05	R954		----------	NRSA63J-102X	MG RESISTOR	(Addition)	1	01,02,03,04,05,06,07,08,09,0A,0B,0C, 0D,0E,0F,10,11,12,13,14,15,16,17
	05	R955		----------	NRSA63J-301X	MG RESISTOR	(Addition)	1	01,02,03,04,05,06,07,08,09,0A,0B,0C, 0D,0E,0F,10,11,12,13,14,15,16,17
	05	R956		----------	NRSA63J-102X	MG RESISTOR	(Addition)	1	01,02,03,04,05,06,07,08,09,0A,0B,0C, 0D,0E,0F,10,11,12,13,14,15,16,17
	05	R957		----------	NRSA6AJ-104W	MG RESISTOR	(Addition)	1	01,02,03,04,05,06,07,08,09,0A,0B,0C, 0D,0E,0F,10,11,12,13,14,15,16,17
	05	R958		----------	NRSA6AJ-273W	MG RESISTOR	(Addition)	1	01,02,03,04,05,06,07,08,09,0A,0B,0C, 0D,0E,0F,10,11,12,13,14,15,16,17
	05	R961		----------	NRSA6AJ-102W	MG RESISTOR	(Addition)	1	01,02,03,04,05,06,07,08,09,0A,0B,0C, 0D,0E,0F,10,11,12,13,14,15,16,17
	05	R962		----------	NRSA6AJ-222W	MG RESISTOR	(Addition)	1	01,02,03,04,05,06,07,08,09,0A,0B,0C, 0D,0E,0F,10,11,12,13,14,15,16,17
	05	R969		----------	NRSA63J-562X	MG RESISTOR	(Addition)	1	01,02,03,04,05,06,07,08,09,0A,0B,0C, 0D,0E,0F,10,11,12,13,14,15,16,17
	05	R970		----------	NRSA63J-333X	MG RESISTOR	(Addition)	1	01,02,03,04,05,06,07,08,09,0A,0B,0C, 0D,0E,0F,10,11,12,13,14,15,16,17
	05	R971		----------	NRSA63J-122X	MG RESISTOR	(Addition)	1	01,02,03,04,05,06,07,08,09,0A,0B,0C, 0D,0E,0F,10,11,12,13,14,15,16,17
	05	R972		----------	NRSA63J-153X	MG RESISTOR	(Addition)	1	01,02,03,04,05,06,07,08,09,0A,0B,0C, 0D,0E,0F,10,11,12,13,14,15,16,17
	05	R973		----------	NRSA63J-563X	MG RESISTOR	(Addition)	1	01,02,03,04,05,06,07,08,09,0A,0B,0C, 0D,0E,0F,10,11,12,13,14,15,16,17
	05	R974		----------	NRSA63J-104X	MG RESISTOR	(Addition)	1	01,02,03,04,05,06,07,08,09,0A,0B,0C, 0D,0E,0F,10,11,12,13,14,15,16,17
	05	R975		----------	NRSA63J-333X	MG RESISTOR	(Addition)	1	01,02,03,04,05,06,07,08,09,0A,0B,0C, 0D,0E,0F,10,11,12,13,14,15,16,17
	05	R976		----------	NRSA63J-563X	MG RESISTOR	(Addition)	1	01,02,03,04,05,06,07,08,09,0A,0B,0C, 0D,0E,0F,10,11,12,13,14,15,16,17
	05	R977		----------	NRSA63J-183X	MG RESISTOR	(Addition)	1	01,02,03,04,05,06,07,08,09,0A,0B,0C, 0D,0E,0F,10,11,12,13,14,15,16,17
	05	R978		----------	NRSA63J-103X	MG RESISTOR	(Addition)	1	01,02,03,04,05,06,07,08,09,0A,0B,0C, 0D,0E,0F,10,11,12,13,14,15,16,17
	05	R979		----------	NRSA63J-122X	MG RESISTOR	(Addition)	1	01,02,03,04,05,06,07,08,09,0A,0B,0C, 0D,0E,0F,10,11,12,13,14,15,16,17
	05	R980		----------	NRSA63J-822X	MG RESISTOR	(Addition)	1	01,02,03,04,05,06,07,08,09,0A,0B,0C, 0D,0E,0F,10,11,12,13,14,15,16,17
	05	R981		----------	NRSA63J-681X	MG RESISTOR	(Addition)	1	01,02,03,04,05,06,07,08,09,0A,0B,0C, 0D,0E,0F,10,11,12,13,14,15,16,17
	05	R982		----------	NRSA63J-124X	MG RESISTOR	(Addition)	1	01,02,03,04,05,06,07,08,09,0A,0B,0C, 0D,0E,0F,10,11,12,13,14,15,16,17
	05	R983		----------	NRSA63J-333X	MG RESISTOR	(Addition)	1	01,02,03,04,05,06,07,08,09,0A,0B,0C, 0D,0E,0F,10,11,12,13,14,15,16,17
	05	R984		----------	NRSA63J-470X	MG RESISTOR	(Addition)	1	01,02,03,04,05,06,07,08,09,0A,0B,0C, 0D,0E,0F,10,11,12,13,14,15,16,17
	05	R985		----------	NRSA63J-471X	MG RESISTOR	(Addition)	1	01,02,03,04,05,06,07,08,09,0A,0B,0C, 0D,0E,0F,10,11,12,13,14,15,16,17
	05	R986		----------	NRSA63J-333X	MG RESISTOR	(Addition)	1	01,02,03,04,05,06,07,08,09,0A,0B,0C, 0D,0E,0F,10,11,12,13,14,15,16,17
	05	R987		----------	NRSA63J-333X	MG RESISTOR	(Addition)	1	01,02,03,04,05,06,07,08,09,0A,0B,0C, 0D,0E,0F,10,11,12,13,14,15,16,17

⚠	Symbol		or	Part No. <Rev.001>	Part No. <Rev.002>	Part Name	Description	Qty	Models
	05	R988		----------	NRSA63J-151X	MG RESISTOR	(Addition)	1	01,02,03,04,05,06,07,08,09,0A,0B,0C,0D,0E,0F,10,11,12,13,14,15,16,17
	05	R989		----------	NRSA63J-100X	MG RESISTOR	(Addition)	1	01,02,03,04,05,06,07,08,09,0A,0B,0C,0D,0E,0F,10,11,12,13,14,15,16,17
	05	R993		----------	NRSA63J-472X	MG RESISTOR	(Addition)	1	01,02,03,04,05,06,07,08,09,0A,0B,0C,0D,0E,0F,10,11,12,13,14,15,16,17
	05	R994		----------	NRS181J-222X	MG RESISTOR	(Addition)	1	01,02,03,04,05,06,07,08,09,0A,0B,0C,0D,0E,0F,10,11,12,13,14,15,16,17
	05	R995		----------	NRS181J-222X	MG RESISTOR	(Addition)	1	01,02,03,04,05,06,07,08,09,0A,0B,0C,0D,0E,0F,10,11,12,13,14,15,16,17
	05	R1107		----------	NRSA63F-123X	MG RESISTOR	(Addition)	1	01,02,03,04,05,06,07,08,09,0A,0B,0C,0D,0E,0F,10,11,12,13,14,15,16,17
	05	R1108		----------	NRSA63J-333X	MG RESISTOR	(Addition)	1	01,02,03,04,05,06,07,08,09,0A,0B,0C,0D,0E,0F,10,11,12,13,14,15,16,17
	05	R1109		----------	NRSA63J-823X	MG RESISTOR	(Addition)	1	01,02,03,04,05,06,07,08,09,0A,0B,0C,0D,0E,0F,10,11,12,13,14,15,16,17
	05	R1110		----------	NRSA63J-332X	MG RESISTOR	(Addition)	1	01,02,03,04,05,06,07,08,09,0A,0B,0C,0D,0E,0F,10,11,12,13,14,15,16,17
	05	R1112		----------	NRSA6AJ-0R0W	MG RESISTOR	(Addition)	1	01,02,03,04,05,06,07,08,09,0A,0B,0C,0D,0E,0F,10,11,12,13,14,15,16,17
	05	R1117		----------	NRSA63F-473X	MG RESISTOR	(Addition)	1	01,02,03,04,05,06,07,08,09,0A,0B,0C,0D,0E,0F,10,11,12,13,14,15,16,17
	05	R1125		----------	NRS181J-0R0X	MG RESISTOR	(Addition)	1	01,02,03,04,05,06,07,08,09,0A,0B,0C,0D,0E,0F,10,11,12,13,14,15,16,17
	05	R1140		----------	NRSA63J-122X	MG RESISTOR	(Addition)	1	01,02,03,04,05,06,07,08,09,0A,0B,0C,0D,0E,0F,10,11,12,13,14,15,16,17
	05	R1141		----------	NRSA63J-681X	MG RESISTOR	(Addition)	1	01,02,03,04,05,06,07,08,09,0A,0B,0C,0D,0E,0F,10,11,12,13,14,15,16,17
	05	R1205		----------	NRS181J-0R0X	MG RESISTOR	(Addition)	1	01,02,03,04,05,06,07,08,09,0A,0B,0C,0D,0E,0F,10,11,12,13,14,15,16,17
	05	R1227		----------	NRSA63J-2R2X	MG RESISTOR	(Addition)	1	01,02,03,04,05,06,07,08,09,0A,0B,0C,0D,0E,0F,10,11,12,13,14,15,16,17
	05	R1228		----------	NRSA63J-0R0X	MG RESISTOR	(Addition)	1	01,02,03,04,05,06,07,08,09,0A,0B,0C,0D,0E,0F,10,11,12,13,14,15,16,17
	05	R1229		----------	NRSA63J-0R0X	MG RESISTOR	(Addition)	1	01,02,03,04,05,06,07,08,09,0A,0B,0C,0D,0E,0F,10,11,12,13,14,15,16,17
	05	R1374		----------	NRSA63J-473X	MG RESISTOR	(Addition)	1	01,02,03,04,05,06,07,08,09,0A,0B,0C,0D,0E,0F,10,11,12,13,14,15,16,17
	05	R1666		----------	NRSA63J-102X	MG RESISTOR	(Addition)	1	01,0A,0B,0C,0D,0E,0F,10,11,12,13,14,15,16,17
	05	R1667		----------	NRSA63J-0R0X	MG RESISTOR	(Addition)	1	01,02,03,04,05,06,07,08,09,0A,0B,0C,0D,0E,0F,10,11,12,13,14,15,16,17
	05	R1829		----------	NRSA63J-103X	MG RESISTOR	(Addition)	1	01,02,03,04,05,06,07,08,09,0A,0B,0C,0D,0E,0F,10,11,12,13,14,15,16,17
	05	R1832		----------	NRSA63J-122X	MG RESISTOR	(Addition)	1	01,02,03,04,05,06,07,08,09,0A,0B,0C,0D,0E,0F,10,11,12,13,14,15,16,17
	05	R1834		----------	NRSA63J-122X	MG RESISTOR	(Addition)	1	01,02,03,04,05,06,07,08,09,0A,0B,0C,0D,0E,0F,10,11,12,13,14,15,16,17
	05	R1846		----------	NRSA63J-102X	MG RESISTOR	(Addition)	1	01,02,03,04,05,06,07,08,09,0A,0B,0C,0D,0E,0F,10,11,12,13,14,15,16,17
	05	R1847		----------	NRSA63J-102X	MG RESISTOR	(Addition)	1	01,02,03,04,05,06,07,08,09,0A,0B,0C,0D,0E,0F,10,11,12,13,14,15,16,17
	05	R7102		----------	NRSA6AJ-473W	MG RESISTOR	(Addition)	1	01,02,03,04,05,06,07,08,09,0A,0B,0C,0D,0E,0F,10,11,12,13,14,15,16,17
	05	RA202		----------	NRZ0065-301X	MG.RES C.M	(Addition)	1	01,02,03,04,05,06,07,08,09,0A,0B,0C,0D,0E,0F,10,11,12,13,14,15,16,17
	05	RA702		----------	NRZ0034-102W	NET RESISTOR	(Addition)	1	01,02,03,04,05,06,07,08,09,0A,0B,0C,0D,0E,0F,10,11,12,13,14,15,16,17
	05	RA703		----------	NRZ0034-102W	NET RESISTOR	(Addition)	1	01,02,03,04,05,06,07,08,09,0A,0B,0C,0D,0E,0F,10,11,12,13,14,15,16,17
	05	RA704		----------	NRZ0034-102W	NET RESISTOR	(Addition)	1	01,02,03,04,05,06,07,08,09,0A,0B,0C,0D,0E,0F,10,11,12,13,14,15,16,17
	05	RA705		----------	NRZ0034-102W	NET RESISTOR	(Addition)	1	01,02,03,04,05,06,07,08,09,0A,0B,0C,0D,0E,0F,10,11,12,13,14,15,16,17
	05	RA706		----------	NRZ0034-102W	NET RESISTOR	(Addition)	1	01,02,03,04,05,06,07,08,09,0A,0B,0C,0D,0E,0F,10,11,12,13,14,15,16,17
	05	RA707		----------	NRZ0034-102W	NET RESISTOR	(Addition)	1	01,02,03,04,05,06,07,08,09,0A,0B,0C,0D,0E,0F,10,11,12,13,14,15,16,17
	05	RA708		----------	NRZ0034-102W	NET RESISTOR	(Addition)	1	01,02,03,04,05,06,07,08,09,0A,0B,0C,0D,0E,0F,10,11,12,13,14,15,16,17

⚠	Symbol		or	Part No. <Rev.001>	Part No. <Rev.002>	Part Name	Description	Qty	Models
	05	L1		----------	NQL093K-R22X	COIL	(Addition)	1	01,02,03,04,05,06,07,08,09,0A,0B,0C,0D,0E,0F,10,11,12,13,14,15,16,17
	05	L2		----------	NQL093K-4R7X	COIL	(Addition)	1	01,02,03,04,05,06,07,08,09,0A,0B,0C,0D,0E,0F,10,11,12,13,14,15,16,17
	05	L3		----------	NQL093K-R47X	COIL	(Addition)	1	01,02,03,04,05,06,07,08,09,0A,0B,0C,0D,0E,0F,10,11,12,13,14,15,16,17
	05	L5		----------	NQL093K-1R8X	COIL	(Addition)	1	01,02,03,04,05,06,07,08,09,0A,0B,0C,0D,0E,0F,10,11,12,13,14,15,16,17
	05	L6		----------	NQL114K-561X	P COIL	(Addition)	1	01,02,03,04,05,06,07,08,09,0A,0B,0C,0D,0E,0F,10,11,12,13,14,15,16,17
	05	L7		----------	NQL114K-561X	P COIL	(Addition)	1	01,02,03,04,05,06,07,08,09,0A,0B,0C,0D,0E,0F,10,11,12,13,14,15,16,17
	05	L8		----------	NRS181J-0R0X	MG RESISTOR	(Addition)	1	01,02,03,04,05,06,07,08,09,0A,0B,0C,0D,0E,0F,10,11,12,13,14,15,16,17
	05	L202		----------	NRSA02J-0R0X	MG RESISTOR	(Addition)	1	01,02,03,04,05,06,07,08,09,0A,0B,0C,0D,0E,0F,10,11,12,13,14,15,16,17
	05	L203		----------	NRSA02J-0R0X	MG RESISTOR	(Addition)	1	01,02,03,04,05,06,07,08,09,0A,0B,0C,0D,0E,0F,10,11,12,13,14,15,16,17
	05	L204		----------	NRSA02J-0R0X	MG RESISTOR	(Addition)	1	01,02,03,04,05,06,07,08,09,0A,0B,0C,0D,0E,0F,10,11,12,13,14,15,16,17
	05	L441		----------	NQL52EM-220X	COIL	(Addition)	1	01,02,03,04,05,06,07,08,09,0A,0B,0C,0D,0E,0F,10,11,12,13,14,15,16,17
	05	L701		----------	NQR0022-005X	FERRITE BEADS	(Addition)	1	01,02,03,04,05,06,07,08,09,0A,0B,0C,0D,0E,0F,10,11,12,13,14,15,16,17
	05	L901		----------	QQR0703-001	CHOKE COIL	(Addition)	1	01,02,03,04,05,06,07,08,09,0A,0B,0C,0D,0E,0F,10,11,12,13,14,15,16,17
	05	L910		----------	NQLE74M-100X	COIL	(Addition)	1	01,02,03,04,05,06,07,08,09,0A,0B,0C,0D,0E,0F,10,11,12,13,14,15,16,17
	05	L921		----------	NQL79GM-100X	COIL	(Addition)	1	01,02,03,04,05,06,07,08,09,0A,0B,0C,0D,0E,0F,10,11,12,13,14,15,16,17
	05	L922		----------	NQLC8CM-220X	COIL	(Addition)	1	01,02,03,04,05,06,07,08,09,0A,0B,0C,0D,0E,0F,10,11,12,13,14,15,16,17
	05	L923		----------	NQL79GM-100X	COIL	(Addition)	1	01,02,03,04,05,06,07,08,09,0A,0B,0C,0D,0E,0F,10,11,12,13,14,15,16,17
	05	L924		----------	NQLC8CM-220X	COIL	(Addition)	1	01,02,03,04,05,06,07,08,09,0A,0B,0C,0D,0E,0F,10,11,12,13,14,15,16,17
	05	L951		----------	NQL79GM-100X	COIL	(Addition)	1	01,02,03,04,05,06,07,08,09,0A,0B,0C,0D,0E,0F,10,11,12,13,14,15,16,17
	05	L961		----------	NQLE74M-100X	COIL	(Addition)	1	01,02,03,04,05,06,07,08,09,0A,0B,0C,0D,0E,0F,10,11,12,13,14,15,16,17
	05	L971		----------	NQLD7EM-470X	COIL	(Addition)	1	01,02,03,04,05,06,07,08,09,0A,0B,0C,0D,0E,0F,10,11,12,13,14,15,16,17
	05	L972		----------	NQL79GM-220X	COIL	(Addition)	1	01,02,03,04,05,06,07,08,09,0A,0B,0C,0D,0E,0F,10,11,12,13,14,15,16,17
	05	L973		----------	NQL79GM-220X	COIL	(Addition)	1	01,02,03,04,05,06,07,08,09,0A,0B,0C,0D,0E,0F,10,11,12,13,14,15,16,17
	05	L974		----------	NQL79GM-220X	COIL	(Addition)	1	01,02,03,04,05,06,07,08,09,0A,0B,0C,0D,0E,0F,10,11,12,13,14,15,16,17
	05	L975		----------	NQL79GM-220X	COIL	(Addition)	1	01,02,03,04,05,06,07,08,09,0A,0B,0C,0D,0E,0F,10,11,12,13,14,15,16,17
	05	L1102		----------	NQL71EM-330X	COIL	(Addition)	1	01,02,03,04,05,06,07,08,09,0A,0B,0C,0D,0E,0F,10,11,12,13,14,15,16,17
	05	L1103		----------	NRSA02J-0R0X	MG RESISTOR	(Addition)	1	01,02,03,04,05,06,07,08,09,0A,0B,0C,0D,0E,0F,10,11,12,13,14,15,16,17
	05	L1104		----------	NQLE74M-100X	COIL	(Addition)	1	01,02,03,04,05,06,07,08,09,0A,0B,0C,0D,0E,0F,10,11,12,13,14,15,16,17
	05	L1105		----------	NRSA02J-0R0X	MG RESISTOR	(Addition)	1	01,02,03,04,05,06,07,08,09,0A,0B,0C,0D,0E,0F,10,11,12,13,14,15,16,17
	05	L1106		----------	NRSA02J-0R0X	MG RESISTOR	(Addition)	1	01,02,03,04,05,06,07,08,09,0A,0B,0C,0D,0E,0F,10,11,12,13,14,15,16,17
	05	L1661		----------	NQR0536-001X	CHOKE COIL	(Addition)	1	01,0A,0B,0C,0D,0E,0F,10,11,12,13,14,15,16,17
	05	T1		----------	QQR1813-001	COIL	(Addition)	1	01,02,03,04,05,06,07,08,09,0A,0B,0C,0D,0E,0F,10,11,12,13,14,15,16,17
	05	BZ841		----------	QAN0023-001Z	BUZZER	(Addition)	1	01,02,03,04,05,06,07,08,09,0A,0B,0C,0D,0E,0F,10,11,12,13,14,15,16,17
	05	CN601		----------	QGA2001F1-05	CONNECTOR	(Addition)	1	01,0A,0B,0C,0D,0E,0F,10,11,12,13,14,15,16,17
	05	CN604		----------	QGA2001F1-02	CONNECTOR	(Addition)	1	01,02,03,04,05,06,07,08,09,0A,0B,0C,0D,0E,0F,10,11,12,13,14,15,16,17

⚠	Symbol		or	Part No. <Rev.001>	Part No. <Rev.002>	Part Name	Description	Qty	Models
	05	CN701		----------	QGF0562F1-45W	CONNECTOR	(Addition)	1	01,02,03,04,05,06,07,08,09,0A,0B,0C,0D,0E,0F,10,11,12,13,14,15,16,17
	05	CN702		----------	QGA2501C1-03	CONNECTOR	(Addition)	1	01,02,03,04,05,06,07,08,09,0A,0B,0C,0D,0E,0F,10,11,12,13,14,15,16,17
	05	CN704		----------	QGB2027L9-30X	CONNECTOR	(Addition)	1	01,02,03,04,05,06,07,08,09,0A,0B,0C,0D,0E,0F,10,11,12,13,14,15,16,17
	05	CN708		----------	QGA2501C1-02	CONNECTOR	(Addition)	1	01,0A,0B,0C,0D,0E,0F,10,11,12,13,14,15,16,17
	05	CN803		----------	QGF0534F3-50X	CONNECTOR	(Addition)	1	01,02,03,04,05,06,07,08,09,0A,0B,0C,0D,0E,0F,10,11,12,13,14,15,16,17
	05	CN811		----------	QGB2027MA-30	CONNECTOR	(Addition)	1	01,02,03,04,05,06,07,08,09,0A,0B,0C,0D,0E,0F,10,11,12,13,14,15,16,17
	05	CN901		----------	QNZ0090-001	CAR CONNECTOR	(Addition)	1	01,02,03,04,05,06,07,08,09,0A,0B,0C,0D,0E,0F,10,11,12,13,14,15,16,17
	05	CN961		----------	QGA1002C1-06X	CONNECTOR	(Addition)	1	01,02,03,04,05,06,07,08,09,0A,0B,0C,0D,0E,0F,10,11,12,13,14,15,16,17
⚠	05	F901		----------	NMFZ018-2R5X-E	FUSE	(Addition)	1	01,02,03,04,05,06,07,08,09,0A,0B,0C,0D,0E,0F,10,11,12,13,14,15,16,17
⚠	05	F902		----------	NMFZ018-2R5X-E	FUSE	(Addition)	1	01,02,03,04,05,06,07,08,09,0A,0B,0C,0D,0E,0F,10,11,12,13,14,15,16,17
	05	F903		----------	NMFZ018-3R0X-E	FUSE	(Addition)	1	01,02,03,04,05,06,07,08,09,0A,0B,0C,0D,0E,0F,10,11,12,13,14,15,16,17
	05	F1901		----------	NMFZ018-2R5X-E	FUSE	(Addition)	1	01,02,03,04,05,06,07,08,09,0A,0B,0C,0D,0E,0F,10,11,12,13,14,15,16,17
	05	J1		----------	QNB0190-001	ANT TERMINAL	(Addition)	1	01,02,03,04,05,06,07,08,09,0A,0B,0C,0D,0E,0F,10,11,12,13,14,15,16,17
	05	J321		----------	QNN0844-001	CONNECTOR	(Addition)	1	01,02,03,04,05,06,07,08,09,0A,0B,0C,0D,0E,0F,10,11,12,13,14,15,16,17
	05	J801		----------	QNZ0095-001	CONNECTOR	(Addition)	1	01,02,03,04,05,06,07,08,09,0A,0B,0C,0D,0E,0F,10,11,12,13,14,15,16,17
	05	K445		----------	NQR0129-002X	FERRITE BEADS	(Addition)	1	01,02,03,04,05,06,07,08,09,0A,0B,0C,0D,0E,0F,10,11,12,13,14,15,16,17
	05	K1220		----------	NQR0022-005X	FERRITE BEADS	(Addition)	1	01,02,03,04,05,06,07,08,09,0A,0B,0C,0D,0E,0F,10,11,12,13,14,15,16,17
	05	PP1		----------	QZW0010-001	STYLE PIN	(Addition)	1	01,02,03,04,05,06,07,08,09,0A,0B,0C,0D,0E,0F,10,11,12,13,14,15,16,17
	05	TH721		----------	NAD0028-103X	N THERMISTOR	(Addition)	1	01,02,03,04,05,06,07,08,09,0A,0B,0C,0D,0E,0F,10,11,12,13,14,15,16,17
	05	X1		----------	QAX0928-001Z	CRYSTAL	(Addition)	1	01,02,03,04,05,06,07,08,09,0A,0B,0C,0D,0E,0F,10,11,12,13,14,15,16,17
	05	X2		----------	QAX0926-001Z	CRYSTAL	(Addition)	1	0B,0C,11,15
	05	X721		----------	QAX0916-001Z	CRYSTAL	(Addition)	1	01,02,03,04,05,06,07,08,09,0A,0B,0C,0D,0E,0F,10,11,12,13,14,15,16,17
	05	X722		----------	QAX0401-001	CRYSTAL	(Addition)	1	01,02,03,04,05,06,07,08,09,0A,0B,0C,0D,0E,0F,10,11,12,13,14,15,16,17

Panel board [06]

⚠	Symbol		or	Part No. <Rev.001>	Part No. <Rev.002>	Part Name	Description	Qty	Models
⚠	06	IC601		----------	JES1651	IC (PROGRAMED)	(Addition)	1	01,02,03,04,05,06,07,08,09,0A,0B,0C,0D,0E,0F,10,11,12,13,14,15,16,17
	06	IC631		----------	OZ964ISN-X	IC	(Addition)	1	01,02,03,04,05,06,07,08,09,0A,0B,0C,0D,0E,0F,10,11,12,13,14,15,16,17
	06	IC632		----------	TC7SET08FU-J-X	IC(DIGITAL)	(Addition)	1	01,02,03,04,05,06,07,08,09,0A,0B,0C,0D,0E,0F,10,11,12,13,14,15,16,17
	06	IC633		----------	TPCP8402JVC-X	POWER MOS FET	(Addition)	1	01,02,03,04,05,06,07,08,09,0A,0B,0C,0D,0E,0F,10,11,12,13,14,15,16,17
	06	IC634		----------	TPCP8402JVC-X	POWER MOS FET	(Addition)	1	01,02,03,04,05,06,07,08,09,0A,0B,0C,0D,0E,0F,10,11,12,13,14,15,16,17
⚠	06	IC661		----------	MN103SE60P	IC	(Addition)	1	01,02,03,04,05,06,07,08,09,0A,0B,0C,0D,0E,0F,10,11,12,13,14,15,16,17
	06	IC662		----------	NJU6368PF1-X	IC	(Addition)	1	01,02,03,04,05,06,07,08,09,0A,0B,0C,0D,0E,0F,10,11,12,13,14,15,16,17
	06	IC663		----------	TC7SH04FU-X	IC	(Addition)	1	01,02,03,04,05,06,07,08,09,0A,0B,0C,0D,0E,0F,10,11,12,13,14,15,16,17
	06	IC664		----------	HY57V641620FTPH	IC	(Addition)	1	01,02,03,04,05,06,07,08,09,0A,0B,0C,0D,0E,0F,10,11,12,13,14,15,16,17
	06	IC665		----------	JES1633	IC (PROGRAMED)	(Addition)	1	01,0A,0B,0C

⚠	Symbol		or	Part No. <Rev.001>	Part No. <Rev.002>	Part Name	Description	Qty	Models
	06	IC665		----------	JES1645	IC (PROGRAMED)	(Addition)	1	02,03,04,05,06,07,08,09,0D,0E,0F,10,11,12,13,14,15,16,17
	06	IC666		----------	TC7PA14FU-X	IC	(Addition)	1	01,02,03,04,05,06,07,08,09,0A,0B,0C,0D,0E,0F,10,11,12,13,14,15,16,17
	06	IC667		----------	TC74VHCT04AFT-X	IC	(Addition)	1	01,02,03,04,05,06,07,08,09,0A,0B,0C,0D,0E,0F,10,11,12,13,14,15,16,17
	06	IC669		----------	NJM072BV-X	IC	(Addition)	1	01,02,03,04,05,06,07,08,09,0A,0B,0C,0D,0E,0F,10,11,12,13,14,15,16,17
	06	IC671		----------	RS-771-X	RM.RECEIVER	(Addition)	1	01,02,03,04,05,06,07,08,09,0A,0B,0C,0D,0E,0F,10,11,12,13,14,15,16,17
	06	IC681		----------	NJM2904V-X	IC	(Addition)	1	01,02,03,04,05,06,07,08,09,0A,0B,0C,0D,0E,0F,10,11,12,13,14,15,16,17
	06	IC851		----------	CPI-210/BC/-X	PHOTO COUPLER	(Addition)	1	01,02,03,04,05,06,07,08,09,0A,0B,0C,0D,0E,0F,10,11,12,13,14,15,16,17
	06	Q601		----------	ISA1530AC1/QR/X	TRANSISTOR	(Addition)	1	01,02,03,04,05,06,07,08,09,0A,0B,0C,0D,0E,0F,10,11,12,13,14,15,16,17
	06	Q601	or	----------	2SA2077-X	TRANSISTOR	(Addition)	1	01,02,03,04,05,06,07,08,09,0A,0B,0C,0D,0E,0F,10,11,12,13,14,15,16,17
	06	Q602		----------	2SC3928A/QR/-X	TRANSISTOR	(Addition)	1	01,02,03,04,05,06,07,08,09,0A,0B,0C,0D,0E,0F,10,11,12,13,14,15,16,17
	06	Q602	or	----------	2SC5845-X	TRANSISTOR	(Addition)	1	01,02,03,04,05,06,07,08,09,0A,0B,0C,0D,0E,0F,10,11,12,13,14,15,16,17
	06	Q603		----------	RT1N141C-X	DIGI TRANSISTOR	(Addition)	1	01,02,03,04,05,06,07,08,09,0A,0B,0C,0D,0E,0F,10,11,12,13,14,15,16,17
	06	Q603	or	----------	UN2211-X	TRANSISTOR	(Addition)	1	01,02,03,04,05,06,07,08,09,0A,0B,0C,0D,0E,0F,10,11,12,13,14,15,16,17
	06	Q604		----------	2SC5938A/B/-X	TRANSISTOR	(Addition)	1	01,02,03,04,05,06,07,08,09,0A,0B,0C,0D,0E,0F,10,11,12,13,14,15,16,17
	06	Q6001		----------	ISA1530AC1/QR/X	TRANSISTOR	(Addition)	1	01,02,03,04,05,06,07,08,09,0A,0B,0C,0D,0E,0F,10,11,12,13,14,15,16,17
	06	Q6001	or	----------	2SA2077-X	TRANSISTOR	(Addition)	1	01,02,03,04,05,06,07,08,09,0A,0B,0C,0D,0E,0F,10,11,12,13,14,15,16,17
	06	Q6305		----------	ISA1530AC1/QR/X	TRANSISTOR	(Addition)	1	01,02,03,04,05,06,07,08,09,0A,0B,0C,0D,0E,0F,10,11,12,13,14,15,16,17
	06	Q6305	or	----------	2SA2077-X	TRANSISTOR	(Addition)	1	01,02,03,04,05,06,07,08,09,0A,0B,0C,0D,0E,0F,10,11,12,13,14,15,16,17
	06	Q6307		----------	RT1N141C-X	DIGI TRANSISTOR	(Addition)	1	01,02,03,04,05,06,07,08,09,0A,0B,0C,0D,0E,0F,10,11,12,13,14,15,16,17
	06	Q6307	or	----------	UN2211-X	TRANSISTOR	(Addition)	1	01,02,03,04,05,06,07,08,09,0A,0B,0C,0D,0E,0F,10,11,12,13,14,15,16,17
	06	Q6401		----------	2SC3928A/QR/-X	TRANSISTOR	(Addition)	1	01,02,03,04,05,06,07,08,09,0A,0B,0C,0D,0E,0F,10,11,12,13,14,15,16,17
	06	Q6401	or	----------	2SC5845-X	TRANSISTOR	(Addition)	1	01,02,03,04,05,06,07,08,09,0A,0B,0C,0D,0E,0F,10,11,12,13,14,15,16,17
	06	Q6402		----------	ISA1530AC1/QR/X	TRANSISTOR	(Addition)	1	01,02,03,04,05,06,07,08,09,0A,0B,0C,0D,0E,0F,10,11,12,13,14,15,16,17
	06	Q6402	or	----------	2SA2077-X	TRANSISTOR	(Addition)	1	01,02,03,04,05,06,07,08,09,0A,0B,0C,0D,0E,0F,10,11,12,13,14,15,16,17
	06	Q6403		----------	2SC3928A/QR/-X	TRANSISTOR	(Addition)	1	01,02,03,04,05,06,07,08,09,0A,0B,0C,0D,0E,0F,10,11,12,13,14,15,16,17
	06	Q6403	or	----------	2SC5845-X	TRANSISTOR	(Addition)	1	01,02,03,04,05,06,07,08,09,0A,0B,0C,0D,0E,0F,10,11,12,13,14,15,16,17
	06	Q6404		----------	2SC3928A/QR/-X	TRANSISTOR	(Addition)	1	01,02,03,04,05,06,07,08,09,0A,0B,0C,0D,0E,0F,10,11,12,13,14,15,16,17
	06	Q6404	or	----------	2SC5845-X	TRANSISTOR	(Addition)	1	01,02,03,04,05,06,07,08,09,0A,0B,0C,0D,0E,0F,10,11,12,13,14,15,16,17
	06	Q6405		----------	ISA1530AC1/QR/X	TRANSISTOR	(Addition)	1	01,02,03,04,05,06,07,08,09,0A,0B,0C,0D,0E,0F,10,11,12,13,14,15,16,17
	06	Q6405	or	----------	2SA2077-X	TRANSISTOR	(Addition)	1	01,02,03,04,05,06,07,08,09,0A,0B,0C,0D,0E,0F,10,11,12,13,14,15,16,17
	06	Q6406		----------	ISA1530AC1/QR/X	TRANSISTOR	(Addition)	1	01,02,03,04,05,06,07,08,09,0A,0B,0C,0D,0E,0F,10,11,12,13,14,15,16,17
	06	Q6406	or	----------	2SA2077-X	TRANSISTOR	(Addition)	1	01,02,03,04,05,06,07,08,09,0A,0B,0C,0D,0E,0F,10,11,12,13,14,15,16,17
	06	Q6407		----------	2SC3928A/QR/-X	TRANSISTOR	(Addition)	1	01,02,03,04,05,06,07,08,09,0A,0B,0C,0D,0E,0F,10,11,12,13,14,15,16,17
	06	Q6407	or	----------	2SC5845-X	TRANSISTOR	(Addition)	1	01,02,03,04,05,06,07,08,09,0A,0B,0C,0D,0E,0F,10,11,12,13,14,15,16,17
	06	Q6701		----------	RT1P141C-X	DIGI TRANSISTOR	(Addition)	1	01,02,03,04,05,06,07,08,09,0A,0B,0C,0D,0E,0F,10,11,12,13,14,15,16,17

⚠	Symbol		or	Part No. <Rev.001>	Part No. <Rev.002>	Part Name	Description	Qty	Models
	06	Q6701	or	----------	UN2111-X	TRANSISTOR	(Addition)	1	01,02,03,04,05,06,07,08,09,0A,0B,0C,0D,0E,0F,10,11,12,13,14,15,16,17
	06	Q6702		----------	ISA1530AC1/QR/X	TRANSISTOR	(Addition)	1	01,02,03,04,05,06,07,08,09,0A,0B,0C,0D,0E,0F,10,11,12,13,14,15,16,17
	06	Q6702	or	----------	2SA2077-X	TRANSISTOR	(Addition)	1	01,02,03,04,05,06,07,08,09,0A,0B,0C,0D,0E,0F,10,11,12,13,14,15,16,17
	06	Q6703		----------	RT1N141C-X	DIGI TRANSISTOR	(Addition)	1	01,02,03,04,05,06,07,08,09,0A,0B,0C,0D,0E,0F,10,11,12,13,14,15,16,17
	06	Q6703	or	----------	UN2211-X	TRANSISTOR	(Addition)	1	01,02,03,04,05,06,07,08,09,0A,0B,0C,0D,0E,0F,10,11,12,13,14,15,16,17
	06	Q6704		----------	ISA1530AC1/QR/X	TRANSISTOR	(Addition)	1	01,02,03,04,05,06,07,08,09,0A,0B,0C,0D,0E,0F,10,11,12,13,14,15,16,17
	06	Q6704	or	----------	2SA2077-X	TRANSISTOR	(Addition)	1	01,02,03,04,05,06,07,08,09,0A,0B,0C,0D,0E,0F,10,11,12,13,14,15,16,17
	06	Q6705		----------	RT1N141C-X	DIGI TRANSISTOR	(Addition)	1	01,02,03,04,05,06,07,08,09,0A,0B,0C,0D,0E,0F,10,11,12,13,14,15,16,17
	06	Q6705	or	----------	UN2211-X	TRANSISTOR	(Addition)	1	01,02,03,04,05,06,07,08,09,0A,0B,0C,0D,0E,0F,10,11,12,13,14,15,16,17
	06	Q6806		----------	2SC3928A/QR/-X	TRANSISTOR	(Addition)	1	01,02,03,04,05,06,07,08,09,0A,0B,0C,0D,0E,0F,10,11,12,13,14,15,16,17
	06	Q6806	or	----------	2SC5845-X	TRANSISTOR	(Addition)	1	01,02,03,04,05,06,07,08,09,0A,0B,0C,0D,0E,0F,10,11,12,13,14,15,16,17
	06	Q6807		----------	RT1N141C-X	DIGI TRANSISTOR	(Addition)	1	01,02,03,04,05,06,07,08,09,0A,0B,0C,0D,0E,0F,10,11,12,13,14,15,16,17
	06	Q6807	or	----------	UN2211-X	TRANSISTOR	(Addition)	1	01,02,03,04,05,06,07,08,09,0A,0B,0C,0D,0E,0F,10,11,12,13,14,15,16,17
	06	Q6808		----------	2SA2119K-X	TRANSISTOR	(Addition)	1	01,02,03,04,05,06,07,08,09,0A,0B,0C,0D,0E,0F,10,11,12,13,14,15,16,17
	06	Q6809		----------	2SA2119K-X	TRANSISTOR	(Addition)	1	01,02,03,04,05,06,07,08,09,0A,0B,0C,0D,0E,0F,10,11,12,13,14,15,16,17
	06	Q6810		----------	2SC5938A/B/-X	TRANSISTOR	(Addition)	1	01,02,03,04,05,06,07,08,09,0A,0B,0C,0D,0E,0F,10,11,12,13,14,15,16,17
	06	Q6811		----------	2SC5938A/B/-X	TRANSISTOR	(Addition)	1	01,02,03,04,05,06,07,08,09,0A,0B,0C,0D,0E,0F,10,11,12,13,14,15,16,17
	06	Q8501		----------	2SC3928A/QR/-X	TRANSISTOR	(Addition)	1	01,02,03,04,05,06,07,08,09,0A,0B,0C,0D,0E,0F,10,11,12,13,14,15,16,17
	06	Q8501	or	----------	2SC5845-X	TRANSISTOR	(Addition)	1	01,02,03,04,05,06,07,08,09,0A,0B,0C,0D,0E,0F,10,11,12,13,14,15,16,17
	06	D601		----------	MA111-X	SI DIODE	(Addition)	1	01,02,03,04,05,06,07,08,09,0A,0B,0C,0D,0E,0F,10,11,12,13,14,15,16,17
	06	D601	or	----------	1SS355W-X	DIODE	(Addition)	1	01,02,03,04,05,06,07,08,09,0A,0B,0C,0D,0E,0F,10,11,12,13,14,15,16,17
	06	D602		----------	MC2836-X	DIODE	(Addition)	1	01,02,03,04,05,06,07,08,09,0A,0B,0C,0D,0E,0F,10,11,12,13,14,15,16,17
	06	D602	or	----------	MA152WA-X	DIODE	(Addition)	1	01,02,03,04,05,06,07,08,09,0A,0B,0C,0D,0E,0F,10,11,12,13,14,15,16,17
	06	D671		----------	CL-201IR-X-X	LED	(Addition)	1	01,02,03,04,05,06,07,08,09,0A,0B,0C,0D,0E,0F,10,11,12,13,14,15,16,17
	06	D672		----------	NECBB205/WPQR/X	LED	(Addition)	1	01,0A,0B,0C,0D,0E,0F,10,11,12,13,14,15,16,17
	06	D672		----------	LHQ974/LM/-X	LED	(Addition)	1	02,03,04,05,06,07,08,09
	06	D673		----------	NECBB205/WPQR/X	LED	(Addition)	1	01,0A,0B,0C,0D,0E,0F,10,11,12,13,14,15,16,17
	06	D673		----------	LHQ974/LM/-X	LED	(Addition)	1	02,03,04,05,06,07,08,09
	06	D674		----------	NECBB205/WPQR/X	LED	(Addition)	1	01,0A,0B,0C,0D,0E,0F,10,11,12,13,14,15,16,17
	06	D674		----------	LHQ974/LM/-X	LED	(Addition)	1	02,03,04,05,06,07,08,09
	06	D675		----------	NECBB205/WPQR/X	LED	(Addition)	1	01,0A,0B,0C,0D,0E,0F,10,11,12,13,14,15,16,17
	06	D675		----------	LHQ974/LM/-X	LED	(Addition)	1	02,03,04,05,06,07,08,09
	06	D676		----------	NECBB205/WPQR/X	LED	(Addition)	1	01,0A,0B,0C,0D,0E,0F,10,11,12,13,14,15,16,17
	06	D676		----------	LHQ974/LM/-X	LED	(Addition)	1	02,03,04,05,06,07,08,09
	06	D677		----------	NECBB205/WPQR/X	LED	(Addition)	1	01,0A,0B,0C,0D,0E,0F,10,11,12,13,14,15,16,17
	06	D677		----------	LHQ974/LM/-X	LED	(Addition)	1	02,03,04,05,06,07,08,09
	06	D678		----------	NECBB205/WPQR/X	LED	(Addition)	1	01,0A,0B,0C,0D,0E,0F,10,11,12,13,14,15,16,17
	06	D678		----------	LHQ974/LM/-X	LED	(Addition)	1	02,03,04,05,06,07,08,09

⚠	Symbol		or	Part No. <Rev.001>	Part No. <Rev.002>	Part Name	Description	Qty	Models
	06	D679		----------	NECBB205/WPQR/X	LED	(Addition)	1	01,0A,0B,0C,0D,0E,0F,10,11,12,13,14,15,16,17
	06	D679		----------	LHQ974/LM/-X	LED	(Addition)	1	02,03,04,05,06,07,08,09
	06	D680		----------	NECBB205/WPQR/X	LED	(Addition)	1	01,0A,0B,0C,0D,0E,0F,10,11,12,13,14,15,16,17
	06	D680		----------	LHQ974/LM/-X	LED	(Addition)	1	02,03,04,05,06,07,08,09
	06	D681		----------	NECBB205/WPQR/X	LED	(Addition)	1	01,0A,0B,0C,0D,0E,0F,10,11,12,13,14,15,16,17
	06	D681		----------	LHQ974/LM/-X	LED	(Addition)	1	02,03,04,05,06,07,08,09
	06	D682		----------	NECBB205/WPQR/X	LED	(Addition)	1	01,0A,0B,0C,0D,0E,0F,10,11,12,13,14,15,16,17
	06	D682		----------	LHQ974/LM/-X	LED	(Addition)	1	02,03,04,05,06,07,08,09
	06	D683		----------	NECBB205/WPQR/X	LED	(Addition)	1	01,0A,0B,0C,0D,0E,0F,10,11,12,13,14,15,16,17
	06	D683		----------	LHQ974/LM/-X	LED	(Addition)	1	02,03,04,05,06,07,08,09
	06	D684		----------	NECWB205/B2/-X	E CAPACITOR	(Addition)	1	01,0A,0B,0C,0D,0E,0F,10,11,12,13,14,15,16,17
	06	D685		----------	NECWB205/B2/-X	E CAPACITOR	(Addition)	1	01,0A,0B,0C,0D,0E,0F,10,11,12,13,14,15,16,17
	06	D686		----------	NECWB205/B2/-X	E CAPACITOR	(Addition)	1	01,0A,0B,0C,0D,0E,0F,10,11,12,13,14,15,16,17
	06	D687		----------	NECWB205/B2/-X	E CAPACITOR	(Addition)	1	01,0A,0B,0C,0D,0E,0F,10,11,12,13,14,15,16,17
	06	D688		----------	NECBB205/WPQR/X	LED	(Addition)	1	01,0A,0B,0C,0D,0E,0F,10,11,12,13,14,15,16,17
	06	D688		----------	LHQ974/LM/-X	LED	(Addition)	1	02,03,04,05,06,07,08,09
	06	D689		----------	NECBB205/WPQR/X	LED	(Addition)	1	01,0A,0B,0C,0D,0E,0F,10,11,12,13,14,15,16,17
	06	D689		----------	LHQ974/LM/-X	LED	(Addition)	1	02,03,04,05,06,07,08,09
	06	D690		----------	NECBB205/WPQR/X	LED	(Addition)	1	01,0A,0B,0C,0D,0E,0F,10,11,12,13,14,15,16,17
	06	D690		----------	LHQ974/LM/-X	LED	(Addition)	1	02,03,04,05,06,07,08,09
	06	D691		----------	NECBB205/WPQR/X	LED	(Addition)	1	01,0A,0B,0C,0D,0E,0F,10,11,12,13,14,15,16,17
	06	D691		----------	LHQ974/LM/-X	LED	(Addition)	1	02,03,04,05,06,07,08,09
	06	D6001		----------	MA2SD31-X	SB DIODE	(Addition)	1	01,02,03,04,05,06,07,08,09,0A,0B,0C,0D,0E,0F,10,11,12,13,14,15,16,17
	06	D6002		----------	MA2SD31-X	SB DIODE	(Addition)	1	01,02,03,04,05,06,07,08,09,0A,0B,0C,0D,0E,0F,10,11,12,13,14,15,16,17
	06	D6301		----------	MA111-X	SI DIODE	(Addition)	1	01,02,03,04,05,06,07,08,09,0A,0B,0C,0D,0E,0F,10,11,12,13,14,15,16,17
	06	D6301	or	----------	1SS355W-X	DIODE	(Addition)	1	01,02,03,04,05,06,07,08,09,0A,0B,0C,0D,0E,0F,10,11,12,13,14,15,16,17
	06	D6302		----------	MA8047/M/-X	Z DIODE	(Addition)	1	01,02,03,04,05,06,07,08,09,0A,0B,0C,0D,0E,0F,10,11,12,13,14,15,16,17
	06	D6303		----------	MA8047/M/-X	Z DIODE	(Addition)	1	01,02,03,04,05,06,07,08,09,0A,0B,0C,0D,0E,0F,10,11,12,13,14,15,16,17
	06	D6304		----------	BAV99L-X	SI DIODE	(Addition)	1	01,02,03,04,05,06,07,08,09,0A,0B,0C,0D,0E,0F,10,11,12,13,14,15,16,17
	06	D6305		----------	MA8047/M/-X	Z DIODE	(Addition)	1	01,02,03,04,05,06,07,08,09,0A,0B,0C,0D,0E,0F,10,11,12,13,14,15,16,17
	06	D6306		----------	MA8047/M/-X	Z DIODE	(Addition)	1	01,02,03,04,05,06,07,08,09,0A,0B,0C,0D,0E,0F,10,11,12,13,14,15,16,17
	06	D6307		----------	BAV99L-X	SI DIODE	(Addition)	1	01,02,03,04,05,06,07,08,09,0A,0B,0C,0D,0E,0F,10,11,12,13,14,15,16,17
	06	D6401		----------	MA2SD31-X	SB DIODE	(Addition)	1	01,02,03,04,05,06,07,08,09,0A,0B,0C,0D,0E,0F,10,11,12,13,14,15,16,17
	06	D6701		----------	MC2838-X	DIODE	(Addition)	1	01,02,03,04,05,06,07,08,09,0A,0B,0C,0D,0E,0F,10,11,12,13,14,15,16,17
	06	D6701	or	----------	MA152WK-X	SI DIODE	(Addition)	1	01,02,03,04,05,06,07,08,09,0A,0B,0C,0D,0E,0F,10,11,12,13,14,15,16,17
	06	D6702		----------	MA111-X	SI DIODE	(Addition)	1	01,02,03,04,05,06,07,08,09,0A,0B,0C,0D,0E,0F,10,11,12,13,14,15,16,17
	06	D6702	or	----------	1SS355W-X	DIODE	(Addition)	1	01,02,03,04,05,06,07,08,09,0A,0B,0C,0D,0E,0F,10,11,12,13,14,15,16,17
	06	D6806		----------	MA111-X	SI DIODE	(Addition)	1	01,02,03,04,05,06,07,08,09,0A,0B,0C,0D,0E,0F,10,11,12,13,14,15,16,17
	06	D6806	or	----------	1SS355W-X	DIODE	(Addition)	1	01,02,03,04,05,06,07,08,09,0A,0B,0C,0D,0E,0F,10,11,12,13,14,15,16,17

⚠	Symbol		or	Part No. <Rev.001>	Part No. <Rev.002>	Part Name	Description	Qty	Models
	06	D6807		----------	MA111-X	SI DIODE	(Addition)	1	01,02,03,04,05,06,07,08,09,0A,0B,0C,0D,0E,0F,10,11,12,13,14,15,16,17
	06	D6807	or	----------	1SS355W-X	DIODE	(Addition)	1	01,02,03,04,05,06,07,08,09,0A,0B,0C,0D,0E,0F,10,11,12,13,14,15,16,17
	06	C601		----------	NCB30JK-105X	C CAPACITOR	(Addition)	1	01,02,03,04,05,06,07,08,09,0A,0B,0C,0D,0E,0F,10,11,12,13,14,15,16,17
	06	C602		----------	NBE40JM-476X	TA E CAPACITOR	(Addition)	1	01,02,03,04,05,06,07,08,09,0A,0B,0C,0D,0E,0F,10,11,12,13,14,15,16,17
	06	C603		----------	NDCA1HJ-101W	C CAPACITOR	(Addition)	1	01,02,03,04,05,06,07,08,09,0A,0B,0C,0D,0E,0F,10,11,12,13,14,15,16,17
	06	C604		----------	NDCA1HJ-101W	C CAPACITOR	(Addition)	1	01,02,03,04,05,06,07,08,09,0A,0B,0C,0D,0E,0F,10,11,12,13,14,15,16,17
	06	C605		----------	NCBA1AK-473W	C CAPACITOR	(Addition)	1	01,02,03,04,05,06,07,08,09,0A,0B,0C,0D,0E,0F,10,11,12,13,14,15,16,17
	06	C606		----------	NCBA1AK-473W	C CAPACITOR	(Addition)	1	01,02,03,04,05,06,07,08,09,0A,0B,0C,0D,0E,0F,10,11,12,13,14,15,16,17
	06	C607		----------	NDCA1HJ-5R0W	C CAPACITOR	(Addition)	1	01,02,03,04,05,06,07,08,09,0A,0B,0C,0D,0E,0F,10,11,12,13,14,15,16,17
	06	C608		----------	NDCA1HJ-5R0W	C CAPACITOR	(Addition)	1	01,02,03,04,05,06,07,08,09,0A,0B,0C,0D,0E,0F,10,11,12,13,14,15,16,17
	06	C609		----------	NCB31AK-474X	C CAPACITOR	(Addition)	1	01,02,03,04,05,06,07,08,09,0A,0B,0C,0D,0E,0F,10,11,12,13,14,15,16,17
	06	C610		----------	NCB30JK-105X	C CAPACITOR	(Addition)	1	01,02,03,04,05,06,07,08,09,0A,0B,0C,0D,0E,0F,10,11,12,13,14,15,16,17
	06	C611		----------	NCBA1CK-103W	C CAPACITOR	(Addition)	1	01,02,03,04,05,06,07,08,09,0A,0B,0C,0D,0E,0F,10,11,12,13,14,15,16,17
	06	C613		----------	NCBA1AK-473W	C CAPACITOR	(Addition)	1	01,02,03,04,05,06,07,08,09,0A,0B,0C,0D,0E,0F,10,11,12,13,14,15,16,17
	06	C672		----------	NCBA1AK-104W	C CAPACITOR	(Addition)	1	01,02,03,04,05,06,07,08,09,0A,0B,0C,0D,0E,0F,10,11,12,13,14,15,16,17
	06	C673		----------	NCBA1HK-102W	C CAPACITOR	(Addition)	1	01,02,03,04,05,06,07,08,09,0A,0B,0C,0D,0E,0F,10,11,12,13,14,15,16,17
	06	C6001		----------	NCJA0JK-105W-R	C CAPACITOR	(Addition)	1	01,0A
	06	C6001		----------	NCBA1AK-104W	C CAPACITOR	(Addition)	1	02,03,04,05,06,07,08,09,0B,0C,0D,0E,0F,10,11,12,13,14,15,16,17
	06	C6002		----------	NCJA0JK-105W-R	C CAPACITOR	(Addition)	1	01,0A
	06	C6002		----------	NDCA1HJ-471W	C CAPACITOR	(Addition)	1	02,03,04,05,06,07,08,09,0B,0C,0D,0E,0F,10,11,12,13,14,15,16,17
	06	C6003		----------	NCJA0JK-105W-R	C CAPACITOR	(Addition)	1	01,0A
	06	C6003		----------	NCBA1AK-104W	C CAPACITOR	(Addition)	1	02,03,04,05,06,07,08,09,0B,0C,0D,0E,0F,10,11,12,13,14,15,16,17
	06	C6004		----------	NCBA1AK-104W	C CAPACITOR	(Addition)	1	01,02,03,04,05,06,07,08,09,0A,0B,0C,0D,0E,0F,10,11,12,13,14,15,16,17
	06	C6005		----------	NCBA1AK-104W	C CAPACITOR	(Addition)	1	01,02,03,04,05,06,07,08,09,0A,0B,0C,0D,0E,0F,10,11,12,13,14,15,16,17
	06	C6006		----------	NCBA1AK-104W	C CAPACITOR	(Addition)	1	01,02,03,04,05,06,07,08,09,0A,0B,0C,0D,0E,0F,10,11,12,13,14,15,16,17
	06	C6007		----------	NCBA1AK-104W	C CAPACITOR	(Addition)	1	01,02,03,04,05,06,07,08,09,0A,0B,0C,0D,0E,0F,10,11,12,13,14,15,16,17
	06	C6008		----------	NCBA1AK-104W	C CAPACITOR	(Addition)	1	01,02,03,04,05,06,07,08,09,0A,0B,0C,0D,0E,0F,10,11,12,13,14,15,16,17
	06	C6009		----------	NCBA1AK-104W	C CAPACITOR	(Addition)	1	01,02,03,04,05,06,07,08,09,0A,0B,0C,0D,0E,0F,10,11,12,13,14,15,16,17
	06	C6010		----------	NCBA1AK-104W	C CAPACITOR	(Addition)	1	01,02,03,04,05,06,07,08,09,0A,0B,0C,0D,0E,0F,10,11,12,13,14,15,16,17
	06	C6011		----------	NCBA1AK-104W	C CAPACITOR	(Addition)	1	01,02,03,04,05,06,07,08,09,0A,0B,0C,0D,0E,0F,10,11,12,13,14,15,16,17
	06	C6012		----------	NCBA1AK-104W	C CAPACITOR	(Addition)	1	01,02,03,04,05,06,07,08,09,0A,0B,0C,0D,0E,0F,10,11,12,13,14,15,16,17
	06	C6013		----------	NCB20JK-106X	C CAPACITOR	(Addition)	1	01,02,03,04,05,06,07,08,09,0A,0B,0C,0D,0E,0F,10,11,12,13,14,15,16,17
	06	C6014		----------	NCBA1AK-104W	C CAPACITOR	(Addition)	1	01,02,03,04,05,06,07,08,09,0A,0B,0C,0D,0E,0F,10,11,12,13,14,15,16,17
	06	C6015		----------	NCB20JK-106X	C CAPACITOR	(Addition)	1	01,02,03,04,05,06,07,08,09,0A,0B,0C,0D,0E,0F,10,11,12,13,14,15,16,17
	06	C6016		----------	NCB20JK-106X	C CAPACITOR	(Addition)	1	01,02,03,04,05,06,07,08,09,0A,0B,0C,0D,0E,0F,10,11,12,13,14,15,16,17
	06	C6017		----------	NCBA1AK-104W	C CAPACITOR	(Addition)	1	01,02,03,04,05,06,07,08,09,0A,0B,0C,0D,0E,0F,10,11,12,13,14,15,16,17
	06	C6018		----------	NCBA1AK-104W	C CAPACITOR	(Addition)	1	01,02,03,04,05,06,07,08,09,0A,0B,0C,0D,0E,0F,10,11,12,13,14,15,16,17

⚠	Symbol		or	Part No. <Rev.001>	Part No. <Rev.002>	Part Name	Description	Qty	Models
	06	C6019		----------	NCBA1AK-104W	C CAPACITOR	(Addition)	1	01,02,03,04,05,06,07,08,09,0A,0B,0C,0D,0E,0F,10,11,12,13,14,15,16,17
	06	C6020		----------	NCBA1AK-104W	C CAPACITOR	(Addition)	1	01,02,03,04,05,06,07,08,09,0A,0B,0C,0D,0E,0F,10,11,12,13,14,15,16,17
	06	C6021		----------	NCBA1AK-104W	C CAPACITOR	(Addition)	1	01,02,03,04,05,06,07,08,09,0A,0B,0C,0D,0E,0F,10,11,12,13,14,15,16,17
	06	C6022		----------	NCBA1AK-104W	C CAPACITOR	(Addition)	1	01,02,03,04,05,06,07,08,09,0A,0B,0C,0D,0E,0F,10,11,12,13,14,15,16,17
	06	C6023		----------	NCBA1AK-104W	C CAPACITOR	(Addition)	1	01,02,03,04,05,06,07,08,09,0A,0B,0C,0D,0E,0F,10,11,12,13,14,15,16,17
	06	C6024		----------	NCBA1AK-104W	C CAPACITOR	(Addition)	1	01,02,03,04,05,06,07,08,09,0A,0B,0C,0D,0E,0F,10,11,12,13,14,15,16,17
	06	C6025		----------	NCBA1AK-104W	C CAPACITOR	(Addition)	1	01,02,03,04,05,06,07,08,09,0A,0B,0C,0D,0E,0F,10,11,12,13,14,15,16,17
	06	C6026		----------	NCBA1AK-104W	C CAPACITOR	(Addition)	1	01,02,03,04,05,06,07,08,09,0A,0B,0C,0D,0E,0F,10,11,12,13,14,15,16,17
	06	C6027		----------	NBE40JM-107X	TA E CAPACITOR	(Addition)	1	01,0A
	06	C6027		----------	NBE40JM-476X	TA E CAPACITOR	(Addition)	1	02,03,04,05,06,07,08,09,0B,0C,0D,0E,0F,10,11,12,13,14,15,16,17
	06	C6028		----------	NCBA1AK-104W	C CAPACITOR	(Addition)	1	01,02,03,04,05,06,07,08,09,0A,0B,0C,0D,0E,0F,10,11,12,13,14,15,16,17
	06	C6029		----------	NBE20JM-226X	TA E CAPACITOR	(Addition)	1	01,02,03,04,05,06,07,08,09,0A,0B,0C,0D,0E,0F,10,11,12,13,14,15,16,17
	06	C6030		----------	NDCA1HJ-680W	C CAPACITOR	(Addition)	1	01,02,03,04,05,06,07,08,09,0A,0B,0C,0D,0E,0F,10,11,12,13,14,15,16,17
	06	C6031		----------	NDCA1HJ-330W	C CAPACITOR	(Addition)	1	01,02,03,04,05,06,07,08,09,0A,0B,0C,0D,0E,0F,10,11,12,13,14,15,16,17
	06	C6032		----------	NCBA1CK-103W	C CAPACITOR	(Addition)	1	01,02,03,04,05,06,07,08,09,0A,0B,0C,0D,0E,0F,10,11,12,13,14,15,16,17
	06	C6033		----------	NDCA1HJ-120W	C CAPACITOR	(Addition)	1	01,02,03,04,05,06,07,08,09,0A,0B,0C,0D,0E,0F,10,11,12,13,14,15,16,17
	06	C6034		----------	NDCA1HJ-100W	C CAPACITOR	(Addition)	1	01,02,03,04,05,06,07,08,09,0A,0B,0C,0D,0E,0F,10,11,12,13,14,15,16,17
	06	C6035		----------	NCBA1AK-104W	C CAPACITOR	(Addition)	1	01,02,03,04,05,06,07,08,09,0A,0B,0C,0D,0E,0F,10,11,12,13,14,15,16,17
	06	C6036		----------	NCBA1AK-104W	C CAPACITOR	(Addition)	1	01,02,03,04,05,06,07,08,09,0A,0B,0C,0D,0E,0F,10,11,12,13,14,15,16,17
	06	C6037		----------	NCBA1AK-104W	C CAPACITOR	(Addition)	1	01,02,03,04,05,06,07,08,09,0A,0B,0C,0D,0E,0F,10,11,12,13,14,15,16,17
	06	C6038		----------	NCBA1AK-104W	C CAPACITOR	(Addition)	1	01,02,03,04,05,06,07,08,09,0A,0B,0C,0D,0E,0F,10,11,12,13,14,15,16,17
	06	C6039		----------	NCJA0JK-105W-R	C CAPACITOR	(Addition)	1	01,0A
	06	C6039		----------	NCBA1AK-104W	C CAPACITOR	(Addition)	1	02,03,04,05,06,07,08,09,0B,0C,0D,0E,0F,10,11,12,13,14,15,16,17
	06	C6040		----------	NDCA1HJ-100W	C CAPACITOR	(Addition)	1	01,02,03,04,05,06,07,08,09,0A,0B,0C,0D,0E,0F,10,11,12,13,14,15,16,17
	06	C6041		----------	NDCA1HJ-100W	C CAPACITOR	(Addition)	1	01,02,03,04,05,06,07,08,09,0A,0B,0C,0D,0E,0F,10,11,12,13,14,15,16,17
	06	C6042		----------	NCBA1AK-104W	C CAPACITOR	(Addition)	1	01,02,03,04,05,06,07,08,09,0A,0B,0C,0D,0E,0F,10,11,12,13,14,15,16,17
	06	C6043		----------	NCBA1AK-104W	C CAPACITOR	(Addition)	1	01,02,03,04,05,06,07,08,09,0A,0B,0C,0D,0E,0F,10,11,12,13,14,15,16,17
	06	C6044		----------	NCJ20JM-226X-R	C CAPACITOR	(Addition)	1	01,02,03,04,05,06,07,08,09,0A,0B,0C,0D,0E,0F,10,11,12,13,14,15,16,17
	06	C6045		----------	NCBA1AK-104W	C CAPACITOR	(Addition)	1	01,02,03,04,05,06,07,08,09,0A,0B,0C,0D,0E,0F,10,11,12,13,14,15,16,17
	06	C6047		----------	NDCA1HJ-180W	C CAPACITOR	(Addition)	1	01,02,03,04,05,06,07,08,09,0A,0B,0C,0D,0E,0F,10,11,12,13,14,15,16,17
	06	C6048		----------	NDCA1HJ-680W	C CAPACITOR	(Addition)	1	01,02,03,04,05,06,07,08,09,0A,0B,0C,0D,0E,0F,10,11,12,13,14,15,16,17
	06	C6049		----------	NCB31HK-102X	C CAPACITOR	(Addition)	1	01,02,03,04,05,06,07,08,09,0A,0B,0C,0D,0E,0F,10,11,12,13,14,15,16,17
	06	C6050		----------	NCBA1AK-104W	C CAPACITOR	(Addition)	1	01,02,03,04,05,06,07,08,09,0A,0B,0C,0D,0E,0F,10,11,12,13,14,15,16,17
	06	C6051		----------	NCBA1AK-104W	C CAPACITOR	(Addition)	1	01,02,03,04,05,06,07,08,09,0A,0B,0C,0D,0E,0F,10,11,12,13,14,15,16,17
	06	C6055		----------	NCB20JK-106X	C CAPACITOR	(Addition)	1	01,02,03,04,05,06,07,08,09,0A,0B,0C,0D,0E,0F,10,11,12,13,14,15,16,17
	06	C6056		----------	NCB20JK-106X	C CAPACITOR	(Addition)	1	01,02,03,04,05,06,07,08,09,0A,0B,0C,0D,0E,0F,10,11,12,13,14,15,16,17

⚠	Symbol		or	Part No. <Rev.001>	Part No. <Rev.002>	Part Name	Description	Qty	Models
	06	C6057		----------	NCB20JK-106X	C CAPACITOR	(Addition)	1	01,02,03,04,05,06,07,08,09,0A,0B,0C,0D,0E,0F,10,11,12,13,14,15,16,17
	06	C6058		----------	NCB31HK-103X	C CAPACITOR	(Addition)	1	01,02,03,04,05,06,07,08,09,0A,0B,0C,0D,0E,0F,10,11,12,13,14,15,16,17
	06	C6059		----------	NQR0450-001X	EMI FILTER	(Addition)	1	01,02,03,04,05,06,07,08,09,0A,0B,0C,0D,0E,0F,10,11,12,13,14,15,16,17
	06	C6062		----------	NCBA1AK-104W	C CAPACITOR	(Addition)	1	01,02,03,04,05,06,07,08,09,0A,0B,0C,0D,0E,0F,10,11,12,13,14,15,16,17
	06	C6301		----------	NQR0450-001X	EMI FILTER	(Addition)	1	01,02,03,04,05,06,07,08,09,0A,0B,0C,0D,0E,0F,10,11,12,13,14,15,16,17
	06	C6302		----------	NCB30JK-105X	C CAPACITOR	(Addition)	1	01,02,03,04,05,06,07,08,09,0A,0B,0C,0D,0E,0F,10,11,12,13,14,15,16,17
	06	C6303		----------	NCBA1AK-104W	C CAPACITOR	(Addition)	1	01,02,03,04,05,06,07,08,09,0A,0B,0C,0D,0E,0F,10,11,12,13,14,15,16,17
	06	C6305		----------	NCB21AK-225X	C CAPACITOR	(Addition)	1	01,02,03,04,05,06,07,08,09,0A,0B,0C,0D,0E,0F,10,11,12,13,14,15,16,17
	06	C6306		----------	NCBA1CK-103W	C CAPACITOR	(Addition)	1	01,02,03,04,05,06,07,08,09,0A,0B,0C,0D,0E,0F,10,11,12,13,14,15,16,17
	06	C6307		----------	NCB31AK-474X	C CAPACITOR	(Addition)	1	01,02,03,04,05,06,07,08,09,0A,0B,0C,0D,0E,0F,10,11,12,13,14,15,16,17
	06	C6308		----------	NCBA1AK-104W	C CAPACITOR	(Addition)	1	01,02,03,04,05,06,07,08,09,0A,0B,0C,0D,0E,0F,10,11,12,13,14,15,16,17
	06	C6309		----------	NDCA1HJ-101W	C CAPACITOR	(Addition)	1	01,02,03,04,05,06,07,08,09,0A,0B,0C,0D,0E,0F,10,11,12,13,14,15,16,17
	06	C6310		----------	NCBA1AK-104W	C CAPACITOR	(Addition)	1	01,02,03,04,05,06,07,08,09,0A,0B,0C,0D,0E,0F,10,11,12,13,14,15,16,17
	06	C6311		----------	NCB31EK-473X	C CAPACITOR	(Addition)	1	01,02,03,04,05,06,07,08,09,0A,0B,0C,0D,0E,0F,10,11,12,13,14,15,16,17
	06	C6313		----------	NDCA1HJ-101W	C CAPACITOR	(Addition)	1	01,02,03,04,05,06,07,08,09,0A,0B,0C,0D,0E,0F,10,11,12,13,14,15,16,17
	06	C6314		----------	NDCA1HJ-101W	C CAPACITOR	(Addition)	1	01,02,03,04,05,06,07,08,09,0A,0B,0C,0D,0E,0F,10,11,12,13,14,15,16,17
	06	C6315		----------	NDC31HJ-221X	C CAPACITOR	(Addition)	1	01,02,03,04,05,06,07,08,09,0A,0B,0C,0D,0E,0F,10,11,12,13,14,15,16,17
	06	C6316		----------	NDCA1HJ-101W	C CAPACITOR	(Addition)	1	01,02,03,04,05,06,07,08,09,0A,0B,0C,0D,0E,0F,10,11,12,13,14,15,16,17
	06	C6317		----------	NDCA1HJ-101W	C CAPACITOR	(Addition)	1	01,02,03,04,05,06,07,08,09,0A,0B,0C,0D,0E,0F,10,11,12,13,14,15,16,17
	06	C6318		----------	NCB31EK-473X	C CAPACITOR	(Addition)	1	01,02,03,04,05,06,07,08,09,0A,0B,0C,0D,0E,0F,10,11,12,13,14,15,16,17
	06	C6319		----------	NCB31EK-473X	C CAPACITOR	(Addition)	1	01,02,03,04,05,06,07,08,09,0A,0B,0C,0D,0E,0F,10,11,12,13,14,15,16,17
	06	C6320		----------	NCJ11EK-106X-R	C CAPACITOR	(Addition)	1	01,02,03,04,05,06,07,08,09,0A,0B,0C,0D,0E,0F,10,11,12,13,14,15,16,17
	06	C6321		----------	NCF21HZ-105X	C CAPACITOR	(Addition)	1	01,02,03,04,05,06,07,08,09,0A,0B,0C,0D,0E,0F,10,11,12,13,14,15,16,17
	06	C6322		----------	NCF21HZ-105X	C CAPACITOR	(Addition)	1	01,02,03,04,05,06,07,08,09,0A,0B,0C,0D,0E,0F,10,11,12,13,14,15,16,17
	06	C6323		----------	NCJ11EK-106X-R	C CAPACITOR	(Addition)	1	01,02,03,04,05,06,07,08,09,0A,0B,0C,0D,0E,0F,10,11,12,13,14,15,16,17
	06	C6324		----------	NCJ11EK-106X-R	C CAPACITOR	(Addition)	1	01,02,03,04,05,06,07,08,09,0A,0B,0C,0D,0E,0F,10,11,12,13,14,15,16,17
	06	C6325		----------	NCJ11EK-106X-R	C CAPACITOR	(Addition)	1	01,02,03,04,05,06,07,08,09,0A,0B,0C,0D,0E,0F,10,11,12,13,14,15,16,17
	06	C6326		----------	NCJ11EK-106X-R	C CAPACITOR	(Addition)	1	01,02,03,04,05,06,07,08,09,0A,0B,0C,0D,0E,0F,10,11,12,13,14,15,16,17
	06	C6327		----------	NCJ11EK-106X-R	C CAPACITOR	(Addition)	1	01,02,03,04,05,06,07,08,09,0A,0B,0C,0D,0E,0F,10,11,12,13,14,15,16,17
	06	C6328		----------	NCB11CK-225X	C CAPACITOR	(Addition)	1	01,02,03,04,05,06,07,08,09,0A,0B,0C,0D,0E,0F,10,11,12,13,14,15,16,17
	06	C6329		----------	NCB31HK-473X	C CAPACITOR	(Addition)	1	01,02,03,04,05,06,07,08,09,0A,0B,0C,0D,0E,0F,10,11,12,13,14,15,16,17
	06	C6330		----------	NCB31HK-333X	C CAPACITOR	(Addition)	1	01,02,03,04,05,06,07,08,09,0A,0B,0C,0D,0E,0F,10,11,12,13,14,15,16,17
	06	C6331		----------	NCZ1011-220X	C CAPACITOR	(Addition)	1	01,02,03,04,05,06,07,08,09,0A,0B,0C,0D,0E,0F,10,11,12,13,14,15,16,17
	06	C6332		----------	NCB31HK-392X	C CAPACITOR	(Addition)	1	01,02,03,04,05,06,07,08,09,0A,0B,0C,0D,0E,0F,10,11,12,13,14,15,16,17
	06	C6401		----------	NCB31AK-474X	C CAPACITOR	(Addition)	1	01,02,03,04,05,06,07,08,09,0A,0B,0C,0D,0E,0F,10,11,12,13,14,15,16,17

⚠	Symbol		or	Part No. <Rev.001>	Part No. <Rev.002>	Part Name	Description	Qty	Models
	06	C6402		----------	NCB31AK-474X	C CAPACITOR	(Addition)	1	01,02,03,04,05,06,07,08,09,0A,0B,0C, 0D,0E,0F,10,11,12,13,14,15,16,17
	06	C6403		----------	NCB31AK-474X	C CAPACITOR	(Addition)	1	01,02,03,04,05,06,07,08,09,0A,0B,0C, 0D,0E,0F,10,11,12,13,14,15,16,17
	06	C6404		----------	NCB31AK-474X	C CAPACITOR	(Addition)	1	01,02,03,04,05,06,07,08,09,0A,0B,0C, 0D,0E,0F,10,11,12,13,14,15,16,17
	06	C6406		----------	NCJ11EK-106X-R	C CAPACITOR	(Addition)	1	01,02,03,04,05,06,07,08,09,0A,0B,0C, 0D,0E,0F,10,11,12,13,14,15,16,17
	06	C6408		----------	NCB31CK-105X	C CAPACITOR	(Addition)	1	01,02,03,04,05,06,07,08,09,0A,0B,0C, 0D,0E,0F,10,11,12,13,14,15,16,17
	06	C6409		----------	NCB31CK-104X	C CAPACITOR	(Addition)	1	01,02,03,04,05,06,07,08,09,0A,0B,0C, 0D,0E,0F,10,11,12,13,14,15,16,17
	06	C6410		----------	NCJ21CK-106X-R	C CAPACITOR	(Addition)	1	01,02,03,04,05,06,07,08,09,0A,0B,0C, 0D,0E,0F,10,11,12,13,14,15,16,17
	06	C6412		----------	NCB31CK-105X	C CAPACITOR	(Addition)	1	01,02,03,04,05,06,07,08,09,0A,0B,0C, 0D,0E,0F,10,11,12,13,14,15,16,17
	06	C6413		----------	NCBA1AK-104W	C CAPACITOR	(Addition)	1	01,02,03,04,05,06,07,08,09,0A,0B,0C, 0D,0E,0F,10,11,12,13,14,15,16,17
	06	C6415		----------	NCB31CK-104X	C CAPACITOR	(Addition)	1	01,02,03,04,05,06,07,08,09,0A,0B,0C, 0D,0E,0F,10,11,12,13,14,15,16,17
	06	C6416		----------	NCJ21CK-106X-R	C CAPACITOR	(Addition)	1	01,02,03,04,05,06,07,08,09,0A,0B,0C, 0D,0E,0F,10,11,12,13,14,15,16,17
	06	C6417		----------	NCBA1AK-104W	C CAPACITOR	(Addition)	1	01,02,03,04,05,06,07,08,09,0A,0B,0C, 0D,0E,0F,10,11,12,13,14,15,16,17
	06	C6451		----------	NCB31CK-104X	C CAPACITOR	(Addition)	1	01,02,03,04,05,06,07,08,09,0A,0B,0C, 0D,0E,0F,10,11,12,13,14,15,16,17
	06	C6481		----------	NQR0450-001X	EMI FILTER	(Addition)	1	01,02,03,04,05,06,07,08,09,0A,0B,0C, 0D,0E,0F,10,11,12,13,14,15,16,17
	06	C6482		----------	NQR0450-001X	EMI FILTER	(Addition)	1	01,02,03,04,05,06,07,08,09,0A,0B,0C, 0D,0E,0F,10,11,12,13,14,15,16,17
	06	C6483		----------	NCB31CK-104X	C CAPACITOR	(Addition)	1	01,02,03,04,05,06,07,08,09,0A,0B,0C, 0D,0E,0F,10,11,12,13,14,15,16,17
	06	C6484		----------	NCB31HK-104X	C CAPACITOR	(Addition)	1	01,02,03,04,05,06,07,08,09,0A,0B,0C, 0D,0E,0F,10,11,12,13,14,15,16,17
	06	C6485		----------	NCBA1AK-104W	C CAPACITOR	(Addition)	1	01,02,03,04,05,06,07,08,09,0A,0B,0C, 0D,0E,0F,10,11,12,13,14,15,16,17
	06	C6486		----------	NCBA1AK-104W	C CAPACITOR	(Addition)	1	01,02,03,04,05,06,07,08,09,0A,0B,0C, 0D,0E,0F,10,11,12,13,14,15,16,17
	06	C6487		----------	NBE41AM-476X	TA E CAPACITOR	(Addition)	1	01,02,03,04,05,06,07,08,09,0A,0B,0C, 0D,0E,0F,10,11,12,13,14,15,16,17
	06	C6488		----------	NBE20JM-476X	TA E CAPACITOR	(Addition)	1	01,02,03,04,05,06,07,08,09,0A,0B,0C, 0D,0E,0F,10,11,12,13,14,15,16,17
	06	C6489		----------	NCJ11EK-106X-R	C CAPACITOR	(Addition)	1	01,02,03,04,05,06,07,08,09,0A,0B,0C, 0D,0E,0F,10,11,12,13,14,15,16,17
	06	C6490		----------	NCJ11EK-106X-R	C CAPACITOR	(Addition)	1	01,02,03,04,05,06,07,08,09,0A,0B,0C, 0D,0E,0F,10,11,12,13,14,15,16,17
	06	C6491		----------	NCJ21CK-106X-R	C CAPACITOR	(Addition)	1	01,02,03,04,05,06,07,08,09,0A,0B,0C, 0D,0E,0F,10,11,12,13,14,15,16,17
	06	C6501		----------	NCBA1AK-104W	C CAPACITOR	(Addition)	1	01,02,03,04,05,06,07,08,09,0A,0B,0C, 0D,0E,0F,10,11,12,13,14,15,16,17
	06	C6502		----------	NCB31AK-105X	C CAPACITOR	(Addition)	1	01,0A
	06	C6502		----------	NCB31HK-471X	C CAPACITOR	(Addition)	1	02,03,04,05,06,07,08,09,0B,0C,0D,0E, 0F,10,11,12,13,14,15,16,17
	06	C6503		----------	NCBA1AK-104W	C CAPACITOR	(Addition)	1	01,02,03,04,05,06,07,08,09,0A,0B,0C, 0D,0E,0F,10,11,12,13,14,15,16,17
	06	C6504		----------	NCB31AK-105X	C CAPACITOR	(Addition)	1	01,0A
	06	C6504		----------	NCB31HK-471X	C CAPACITOR	(Addition)	1	02,03,04,05,06,07,08,09,0B,0C,0D,0E, 0F,10,11,12,13,14,15,16,17
	06	C6505		----------	NCBA1AK-104W	C CAPACITOR	(Addition)	1	01,02,03,04,05,06,07,08,09,0A,0B,0C, 0D,0E,0F,10,11,12,13,14,15,16,17
	06	C6507		----------	NCBA1AK-104W	C CAPACITOR	(Addition)	1	01,02,03,04,05,06,07,08,09,0A,0B,0C, 0D,0E,0F,10,11,12,13,14,15,16,17
	06	C6508		----------	NCB31AK-105X	C CAPACITOR	(Addition)	1	01,0A
	06	C6508		----------	NCB31HK-471X	C CAPACITOR	(Addition)	1	02,03,04,05,06,07,08,09,0B,0C,0D,0E, 0F,10,11,12,13,14,15,16,17
	06	C6509		----------	NBE20JM-226X	TA E CAPACITOR	(Addition)	1	01,02,03,04,05,06,07,08,09,0A,0B,0C, 0D,0E,0F,10,11,12,13,14,15,16,17
	06	C6510		----------	NCBA1AK-104W	C CAPACITOR	(Addition)	1	01,02,03,04,05,06,07,08,09,0A,0B,0C, 0D,0E,0F,10,11,12,13,14,15,16,17
	06	C6512		----------	NCB20JK-106X	C CAPACITOR	(Addition)	1	01,02,03,04,05,06,07,08,09,0A,0B,0C, 0D,0E,0F,10,11,12,13,14,15,16,17

⚠	Symbol		or	Part No. <Rev.001>	Part No. <Rev.002>	Part Name	Description	Qty	Models
	06	C6513		----------	NCB20JK-106X	C CAPACITOR	(Addition)	1	01,02,03,04,05,06,07,08,09,0A,0B,0C,0D,0E,0F,10,11,12,13,14,15,16,17
	06	C6514		----------	NCB20JK-106X	C CAPACITOR	(Addition)	1	01,02,03,04,05,06,07,08,09,0A,0B,0C,0D,0E,0F,10,11,12,13,14,15,16,17
	06	C6515		----------	NBE40JM-476X	TA E CAPACITOR	(Addition)	1	01,02,03,04,05,06,07,08,09,0A,0B,0C,0D,0E,0F,10,11,12,13,14,15,16,17
	06	C6801		----------	NCB20JK-475X	C CAPACITOR	(Addition)	1	01,02,03,04,05,06,07,08,09,0A,0B,0C,0D,0E,0F,10,11,12,13,14,15,16,17
	06	C6802		----------	NCB31HK-104X	C CAPACITOR	(Addition)	1	01,02,03,04,05,06,07,08,09,0A,0B,0C,0D,0E,0F,10,11,12,13,14,15,16,17
	06	C6803		----------	NCB31AK-474X	C CAPACITOR	(Addition)	1	01,02,03,04,05,06,07,08,09,0A,0B,0C,0D,0E,0F,10,11,12,13,14,15,16,17
	06	C6804		----------	NCB31AK-474X	C CAPACITOR	(Addition)	1	01,02,03,04,05,06,07,08,09,0A,0B,0C,0D,0E,0F,10,11,12,13,14,15,16,17
	06	C6805		----------	NCJ11EK-106X-R	C CAPACITOR	(Addition)	1	01,02,03,04,05,06,07,08,09,0A,0B,0C,0D,0E,0F,10,11,12,13,14,15,16,17
	06	C6807		----------	NCB31HK-102X	C CAPACITOR	(Addition)	1	01,02,03,04,05,06,07,08,09,0A,0B,0C,0D,0E,0F,10,11,12,13,14,15,16,17
	06	C6808		----------	NCB31HK-102X	C CAPACITOR	(Addition)	1	01,02,03,04,05,06,07,08,09,0A,0B,0C,0D,0E,0F,10,11,12,13,14,15,16,17
	06	C6809		----------	NDC31HJ-101X	C CAPACITOR	(Addition)	1	01,02,03,04,05,06,07,08,09,0A,0B,0C,0D,0E,0F,10,11,12,13,14,15,16,17
	06	C6810		----------	NDC31HJ-101X	C CAPACITOR	(Addition)	1	01,02,03,04,05,06,07,08,09,0A,0B,0C,0D,0E,0F,10,11,12,13,14,15,16,17
	06	C6811		----------	NDC31HJ-101X	C CAPACITOR	(Addition)	1	01,02,03,04,05,06,07,08,09,0A,0B,0C,0D,0E,0F,10,11,12,13,14,15,16,17
	06	C6812		----------	NDC31HJ-101X	C CAPACITOR	(Addition)	1	01,02,03,04,05,06,07,08,09,0A,0B,0C,0D,0E,0F,10,11,12,13,14,15,16,17
	06	C6813		----------	NCBA1HK-102W	C CAPACITOR	(Addition)	1	01,02,03,04,05,06,07,08,09,0A,0B,0C,0D,0E,0F,10,11,12,13,14,15,16,17
	06	C6814		----------	NCBA1HK-102W	C CAPACITOR	(Addition)	1	01,02,03,04,05,06,07,08,09,0A,0B,0C,0D,0E,0F,10,11,12,13,14,15,16,17
	06	R601		----------	NRSA6AJ-102W	MG RESISTOR	(Addition)	1	01,02,03,04,05,06,07,08,09,0A,0B,0C,0D,0E,0F,10,11,12,13,14,15,16,17
	06	R602		----------	NRSA6AJ-102W	MG RESISTOR	(Addition)	1	01,02,03,04,05,06,07,08,09,0A,0B,0C,0D,0E,0F,10,11,12,13,14,15,16,17
	06	R603		----------	NRSA6AJ-101W	MG RESISTOR	(Addition)	1	01,02,03,04,05,06,07,08,09,0A,0B,0C,0D,0E,0F,10,11,12,13,14,15,16,17
	06	R604		----------	NRSA6AJ-101W	MG RESISTOR	(Addition)	1	01,02,03,04,05,06,07,08,09,0A,0B,0C,0D,0E,0F,10,11,12,13,14,15,16,17
	06	R605		----------	NRSA6AJ-101W	MG RESISTOR	(Addition)	1	01,02,03,04,05,06,07,08,09,0A,0B,0C,0D,0E,0F,10,11,12,13,14,15,16,17
	06	R606		----------	NRSA6AJ-102W	MG RESISTOR	(Addition)	1	01,02,03,04,05,06,07,08,09,0A,0B,0C,0D,0E,0F,10,11,12,13,14,15,16,17
	06	R607		----------	NRSA6AJ-102W	MG RESISTOR	(Addition)	1	01,02,03,04,05,06,07,08,09,0A,0B,0C,0D,0E,0F,10,11,12,13,14,15,16,17
	06	R608		----------	NRSA6AJ-102W	MG RESISTOR	(Addition)	1	01,02,03,04,05,06,07,08,09,0A,0B,0C,0D,0E,0F,10,11,12,13,14,15,16,17
	06	R609		----------	NRSA6AJ-102W	MG RESISTOR	(Addition)	1	01,02,03,04,05,06,07,08,09,0A,0B,0C,0D,0E,0F,10,11,12,13,14,15,16,17
	06	R610		----------	NRSA6AJ-102W	MG RESISTOR	(Addition)	1	01,02,03,04,05,06,07,08,09,0A,0B,0C,0D,0E,0F,10,11,12,13,14,15,16,17
	06	R611		----------	NRSA6AJ-102W	MG RESISTOR	(Addition)	1	01,02,03,04,05,06,07,08,09,0A,0B,0C,0D,0E,0F,10,11,12,13,14,15,16,17
	06	R612		----------	NRSA6AJ-101W	MG RESISTOR	(Addition)	1	01,02,03,04,05,06,07,08,09,0A,0B,0C,0D,0E,0F,10,11,12,13,14,15,16,17
	06	R613		----------	NRSA6AJ-101W	MG RESISTOR	(Addition)	1	01,02,03,04,05,06,07,08,09,0A,0B,0C,0D,0E,0F,10,11,12,13,14,15,16,17
	06	R614		----------	NRSA6AJ-102W	MG RESISTOR	(Addition)	1	01,02,03,04,05,06,07,08,09,0A,0B,0C,0D,0E,0F,10,11,12,13,14,15,16,17
	06	R616		----------	NRSA6AJ-102W	MG RESISTOR	(Addition)	1	01,02,03,04,05,06,07,08,09,0A,0B,0C,0D,0E,0F,10,11,12,13,14,15,16,17
	06	R617		----------	NRSA6AJ-102W	MG RESISTOR	(Addition)	1	01,02,03,04,05,06,07,08,09,0A,0B,0C,0D,0E,0F,10,11,12,13,14,15,16,17
	06	R618		----------	NRSA6AJ-101W	MG RESISTOR	(Addition)	1	01,02,03,04,05,06,07,08,09,0A,0B,0C,0D,0E,0F,10,11,12,13,14,15,16,17
	06	R619		----------	NRSA6AJ-101W	MG RESISTOR	(Addition)	1	01,02,03,04,05,06,07,08,09,0A,0B,0C,0D,0E,0F,10,11,12,13,14,15,16,17
	06	R620		----------	NRSA6AJ-0R0W	MG RESISTOR	(Addition)	1	01,02,03,04,05,06,07,08,09,0A,0B,0C,0D,0E,0F,10,11,12,13,14,15,16,17

⚠	Symbol		or	Part No. <Rev.001>	Part No. <Rev.002>	Part Name	Description	Qty	Models
	06	R621		----------	NRSA6AJ-102W	MG RESISTOR	(Addition)	1	01,02,03,04,05,06,07,08,09,0A,0B,0C, 0D,0E,0F,10,11,12,13,14,15,16,17
	06	R622		----------	NRSA6AJ-102W	MG RESISTOR	(Addition)	1	01,02,03,04,05,06,07,08,09,0A,0B,0C, 0D,0E,0F,10,11,12,13,14,15,16,17
	06	R623		----------	NRSA6AJ-0R0W	MG RESISTOR	(Addition)	1	01,02,03,04,05,06,07,08,09,0A,0B,0C, 0D,0E,0F,10,11,12,13,14,15,16,17
	06	R625		----------	NRSA6AJ-101W	MG RESISTOR	(Addition)	1	01,02,03,04,05,06,07,08,09,0A,0B,0C, 0D,0E,0F,10,11,12,13,14,15,16,17
	06	R626		----------	NRSA6AJ-101W	MG RESISTOR	(Addition)	1	01,02,03,04,05,06,07,08,09,0A,0B,0C, 0D,0E,0F,10,11,12,13,14,15,16,17
	06	R627		----------	NRSA6AJ-101W	MG RESISTOR	(Addition)	1	01,02,03,04,05,06,07,08,09,0A,0B,0C, 0D,0E,0F,10,11,12,13,14,15,16,17
	06	R628		----------	NRSA6AJ-101W	MG RESISTOR	(Addition)	1	01,02,03,04,05,06,07,08,09,0A,0B,0C, 0D,0E,0F,10,11,12,13,14,15,16,17
	06	R629		----------	NRSA6AJ-102W	MG RESISTOR	(Addition)	1	01,02,03,04,05,06,07,08,09,0A,0B,0C, 0D,0E,0F,10,11,12,13,14,15,16,17
	06	R630		----------	NRSA6AJ-102W	MG RESISTOR	(Addition)	1	01,02,03,04,05,06,07,08,09,0A,0B,0C, 0D,0E,0F,10,11,12,13,14,15,16,17
	06	R631		----------	NRSA6AJ-102W	MG RESISTOR	(Addition)	1	01,02,03,04,05,06,07,08,09,0A,0B,0C, 0D,0E,0F,10,11,12,13,14,15,16,17
	06	R632		----------	NRSA6AJ-102W	MG RESISTOR	(Addition)	1	01,02,03,04,05,06,07,08,09,0A,0B,0C, 0D,0E,0F,10,11,12,13,14,15,16,17
	06	R633		----------	NRSA6AJ-102W	MG RESISTOR	(Addition)	1	01,02,03,04,05,06,07,08,09,0A,0B,0C, 0D,0E,0F,10,11,12,13,14,15,16,17
	06	R634		----------	NRSA6AJ-101W	MG RESISTOR	(Addition)	1	01,02,03,04,05,06,07,08,09,0A,0B,0C, 0D,0E,0F,10,11,12,13,14,15,16,17
	06	R635		----------	NRSA6AJ-101W	MG RESISTOR	(Addition)	1	01,02,03,04,05,06,07,08,09,0A,0B,0C, 0D,0E,0F,10,11,12,13,14,15,16,17
	06	R636		----------	NRSA6AJ-0R0W	MG RESISTOR	(Addition)	1	01,02,03,04,05,06,07,08,09,0A,0B,0C, 0D,0E,0F,10,11,12,13,14,15,16,17
	06	R637		----------	NRSA6AJ-473W	MG RESISTOR	(Addition)	1	01,02,03,04,05,06,07,08,09,0A,0B,0C, 0D,0E,0F,10,11,12,13,14,15,16,17
	06	R638		----------	NRSA6AJ-102W	MG RESISTOR	(Addition)	1	01,02,03,04,05,06,07,08,09,0A,0B,0C, 0D,0E,0F,10,11,12,13,14,15,16,17
	06	R639		----------	NRSA6AJ-102W	MG RESISTOR	(Addition)	1	01,02,03,04,05,06,07,08,09,0A,0B,0C, 0D,0E,0F,10,11,12,13,14,15,16,17
	06	R640		----------	NRSA6AJ-0R0W	MG RESISTOR	(Addition)	1	01,02,03,04,05,06,07,08,09,0A,0B,0C, 0D,0E,0F,10,11,12,13,14,15,16,17
	06	R641		----------	NRSA6AJ-101W	MG RESISTOR	(Addition)	1	01,02,03,04,05,06,07,08,09,0A,0B,0C, 0D,0E,0F,10,11,12,13,14,15,16,17
	06	R642		----------	NRSA6AJ-101W	MG RESISTOR	(Addition)	1	01,02,03,04,05,06,07,08,09,0A,0B,0C, 0D,0E,0F,10,11,12,13,14,15,16,17
	06	R643		----------	NRSA6AJ-103W	MG RESISTOR	(Addition)	1	01,02,03,04,05,06,07,08,09,0A,0B,0C, 0D,0E,0F,10,11,12,13,14,15,16,17
	06	R646		----------	NRSA6AJ-752W	MG RESISTOR	(Addition)	1	01,02,03,04,05,06,07,08,09,0A,0B,0C, 0D,0E,0F,10,11,12,13,14,15,16,17
	06	R647		----------	NRSA6AJ-752W	MG RESISTOR	(Addition)	1	01,02,03,04,05,06,07,08,09,0A,0B,0C, 0D,0E,0F,10,11,12,13,14,15,16,17
	06	R648		----------	NRSA6AJ-474W	MG RESISTOR	(Addition)	1	01,02,03,04,05,06,07,08,09,0A,0B,0C, 0D,0E,0F,10,11,12,13,14,15,16,17
	06	R649		----------	NRSA6AJ-473W	MG RESISTOR	(Addition)	1	01,02,03,04,05,06,07,08,09,0A,0B,0C, 0D,0E,0F,10,11,12,13,14,15,16,17
	06	R650		----------	NRSA6AJ-333W	MG RESISTOR	(Addition)	1	01,02,03,04,05,06,07,08,09,0A,0B,0C, 0D,0E,0F,10,11,12,13,14,15,16,17
	06	R652		----------	NRSA6AJ-473W	MG RESISTOR	(Addition)	1	01,02,03,04,05,06,07,08,09,0A,0B,0C, 0D,0E,0F,10,11,12,13,14,15,16,17
	06	R653		----------	NRSA6AJ-473W	MG RESISTOR	(Addition)	1	01,02,03,04,05,06,07,08,09,0A,0B,0C, 0D,0E,0F,10,11,12,13,14,15,16,17
	06	R654		----------	NRSA6AJ-474W	MG RESISTOR	(Addition)	1	01,02,03,04,05,06,07,08,09,0A,0B,0C, 0D,0E,0F,10,11,12,13,14,15,16,17
	06	R655		----------	NRSA6AJ-0R0W	MG RESISTOR	(Addition)	1	01,02,03,04,05,06,07,08,09,0A,0B,0C, 0D,0E,0F,10,11,12,13,14,15,16,17
	06	R656		----------	NRSA63J-0R0X	MG RESISTOR	(Addition)	1	01,02,03,04,05,06,07,08,09,0A,0B,0C, 0D,0E,0F,10,11,12,13,14,15,16,17
	06	R657		----------	NRSA63J-0R0X	MG RESISTOR	(Addition)	1	01,02,03,04,05,06,07,08,09,0A,0B,0C, 0D,0E,0F,10,11,12,13,14,15,16,17
	06	R658		----------	NRSA6AJ-474W	MG RESISTOR	(Addition)	1	01,02,03,04,05,06,07,08,09,0A,0B,0C, 0D,0E,0F,10,11,12,13,14,15,16,17
	06	R659		----------	NRSA6AJ-473W	MG RESISTOR	(Addition)	1	01,02,03,04,05,06,07,08,09,0A,0B,0C, 0D,0E,0F,10,11,12,13,14,15,16,17

⚠	Symbol		or	Part No. <Rev.001>	Part No. <Rev.002>	Part Name	Description	Qty	Models
	06	R660		----------	NRSA63J-0R0X	MG RESISTOR	(Addition)	1	01,02,03,04,05,06,07,08,09,0A,0B,0C, 0D,0E,0F,10,11,12,13,14,15,16,17
	06	R661		----------	NRSA63J-0R0X	MG RESISTOR	(Addition)	1	01,02,03,04,05,06,07,08,09,0A,0B,0C, 0D,0E,0F,10,11,12,13,14,15,16,17
	06	R662		----------	NRSA63J-0R0X	MG RESISTOR	(Addition)	1	01,02,03,04,05,06,07,08,09,0A,0B,0C, 0D,0E,0F,10,11,12,13,14,15,16,17
	06	R663		----------	NRSA63J-0R0X	MG RESISTOR	(Addition)	1	01,02,03,04,05,06,07,08,09,0A,0B,0C, 0D,0E,0F,10,11,12,13,14,15,16,17
	06	R664		----------	NRSA63J-0R0X	MG RESISTOR	(Addition)	1	01,02,03,04,05,06,07,08,09,0A,0B,0C, 0D,0E,0F,10,11,12,13,14,15,16,17
	06	R665		----------	NRSA63J-0R0X	MG RESISTOR	(Addition)	1	01,02,03,04,05,06,07,08,09,0A,0B,0C, 0D,0E,0F,10,11,12,13,14,15,16,17
	06	R671		----------	NRSA6AJ-272W	MG RESISTOR	(Addition)	1	01,02,03,04,05,06,07,08,09,0A,0B,0C, 0D,0E,0F,10,11,12,13,14,15,16,17
	06	R672		----------	NRSA6AJ-272W	MG RESISTOR	(Addition)	1	01,02,03,04,05,06,07,08,09,0A,0B,0C, 0D,0E,0F,10,11,12,13,14,15,16,17
	06	R673		----------	NRSA6AJ-272W	MG RESISTOR	(Addition)	1	01,02,03,04,05,06,07,08,09,0A,0B,0C, 0D,0E,0F,10,11,12,13,14,15,16,17
	06	R674		----------	NRSA6AJ-272W	MG RESISTOR	(Addition)	1	01,02,03,04,05,06,07,08,09,0A,0B,0C, 0D,0E,0F,10,11,12,13,14,15,16,17
	06	R675		----------	NRSA6AJ-512W	MG RESISTOR	(Addition)	1	01,02,03,04,05,06,07,08,09,0A,0B,0C, 0D,0E,0F,10,11,12,13,14,15,16,17
	06	R676		----------	NRSA6AJ-512W	MG RESISTOR	(Addition)	1	01,02,03,04,05,06,07,08,09,0A,0B,0C, 0D,0E,0F,10,11,12,13,14,15,16,17
	06	R677		----------	NRSA6AJ-0R0W	MG RESISTOR	(Addition)	1	01,02,03,04,05,06,07,08,09,0A,0B,0C, 0D,0E,0F,10,11,12,13,14,15,16,17
	06	R678		----------	NRSA6AJ-473W	MG RESISTOR	(Addition)	1	01,02,03,04,05,06,07,08,09,0A,0B,0C, 0D,0E,0F,10,11,12,13,14,15,16,17
	06	R679		----------	NRSA63J-0R0X	MG RESISTOR	(Addition)	1	01,02,03,04,05,06,07,08,09,0A,0B,0C, 0D,0E,0F,10,11,12,13,14,15,16,17
	06	R680		----------	NRSA63J-0R0X	MG RESISTOR	(Addition)	1	01,02,03,04,05,06,07,08,09,0A,0B,0C, 0D,0E,0F,10,11,12,13,14,15,16,17
	06	R6002		----------	NRSA6AJ-0R0W	MG RESISTOR	(Addition)	1	01,02,03,04,05,06,07,08,09,0A,0B,0C, 0D,0E,0F,10,11,12,13,14,15,16,17
	06	R6005		----------	NRSA6AJ-680W	MG RESISTOR	(Addition)	1	01,02,03,04,05,06,07,08,09,0A,0B,0C, 0D,0E,0F,10,11,12,13,14,15,16,17
	06	R6006		----------	NRSA6AJ-680W	MG RESISTOR	(Addition)	1	01,02,03,04,05,06,07,08,09,0A,0B,0C, 0D,0E,0F,10,11,12,13,14,15,16,17
	06	R6007		----------	NRSA6AJ-680W	MG RESISTOR	(Addition)	1	01,02,03,04,05,06,07,08,09,0A,0B,0C, 0D,0E,0F,10,11,12,13,14,15,16,17
	06	R6008		----------	NRSA6AJ-0R0W	MG RESISTOR	(Addition)	1	01,02,03,04,05,06,07,08,09,0A,0B,0C, 0D,0E,0F,10,11,12,13,14,15,16,17
	06	R6009		----------	NRSA6AJ-330W	MG RESISTOR	(Addition)	1	01,02,03,04,05,06,07,08,09,0A,0B,0C, 0D,0E,0F,10,11,12,13,14,15,16,17
	06	R6010		----------	NRSA6AJ-103W	MG RESISTOR	(Addition)	1	01,02,03,04,05,06,07,08,09,0A,0B,0C, 0D,0E,0F,10,11,12,13,14,15,16,17
	06	R6011		----------	NRSA6AJ-103W	MG RESISTOR	(Addition)	1	01,02,03,04,05,06,07,08,09,0A,0B,0C, 0D,0E,0F,10,11,12,13,14,15,16,17
	06	R6013		----------	NRSA6AJ-101W	MG RESISTOR	(Addition)	1	01,02,03,04,05,06,07,08,09,0A,0B,0C, 0D,0E,0F,10,11,12,13,14,15,16,17
	06	R6014		----------	NRSA6AJ-101W	MG RESISTOR	(Addition)	1	01,02,03,04,05,06,07,08,09,0A,0B,0C, 0D,0E,0F,10,11,12,13,14,15,16,17
	06	R6015		----------	NRSA6AJ-101W	MG RESISTOR	(Addition)	1	01,02,03,04,05,06,07,08,09,0A,0B,0C, 0D,0E,0F,10,11,12,13,14,15,16,17
	06	R6016		----------	NRSA6AJ-103W	MG RESISTOR	(Addition)	1	01,02,03,04,05,06,07,08,09,0A,0B,0C, 0D,0E,0F,10,11,12,13,14,15,16,17
	06	R6017		----------	NRSA6AJ-101W	MG RESISTOR	(Addition)	1	01,02,03,04,05,06,07,08,09,0A,0B,0C, 0D,0E,0F,10,11,12,13,14,15,16,17
	06	R6018		----------	NRSA6AJ-101W	MG RESISTOR	(Addition)	1	01,02,03,04,05,06,07,08,09,0A,0B,0C, 0D,0E,0F,10,11,12,13,14,15,16,17
	06	R6019		----------	NRSA6AJ-101W	MG RESISTOR	(Addition)	1	01,02,03,04,05,06,07,08,09,0A,0B,0C, 0D,0E,0F,10,11,12,13,14,15,16,17
	06	R6020		----------	NRSA6AJ-101W	MG RESISTOR	(Addition)	1	01,02,03,04,05,06,07,08,09,0A,0B,0C, 0D,0E,0F,10,11,12,13,14,15,16,17
	06	R6021		----------	NRSA6AJ-101W	MG RESISTOR	(Addition)	1	01,02,03,04,05,06,07,08,09,0A,0B,0C, 0D,0E,0F,10,11,12,13,14,15,16,17
	06	R6022		----------	NRSA6AJ-330W	MG RESISTOR	(Addition)	1	01,02,03,04,05,06,07,08,09,0A,0B,0C, 0D,0E,0F,10,11,12,13,14,15,16,17
	06	R6023		----------	NRSA6AJ-101W	MG RESISTOR	(Addition)	1	01,02,03,04,05,06,07,08,09,0A,0B,0C, 0D,0E,0F,10,11,12,13,14,15,16,17

⚠	Symbol		or	Part No. <Rev.001>	Part No. <Rev.002>	Part Name	Description	Qty	Models
	06	R6024		----------	NRSA6AJ-101W	MG RESISTOR	(Addition)	1	01,02,03,04,05,06,07,08,09,0A,0B,0C, 0D,0E,0F,10,11,12,13,14,15,16,17
	06	R6025		----------	NRSA6AJ-101W	MG RESISTOR	(Addition)	1	01,02,03,04,05,06,07,08,09,0A,0B,0C, 0D,0E,0F,10,11,12,13,14,15,16,17
	06	R6026		----------	NRSA6AJ-101W	MG RESISTOR	(Addition)	1	01,02,03,04,05,06,07,08,09,0A,0B,0C, 0D,0E,0F,10,11,12,13,14,15,16,17
	06	R6027		----------	NRSA6AJ-101W	MG RESISTOR	(Addition)	1	01,02,03,04,05,06,07,08,09,0A,0B,0C, 0D,0E,0F,10,11,12,13,14,15,16,17
	06	R6028		----------	NRSA6AJ-223W	MG RESISTOR	(Addition)	1	01,02,03,04,05,06,07,08,09,0A,0B,0C, 0D,0E,0F,10,11,12,13,14,15,16,17
	06	R6029		----------	NRSA6AJ-101W	MG RESISTOR	(Addition)	1	01,02,03,04,05,06,07,08,09,0A,0B,0C, 0D,0E,0F,10,11,12,13,14,15,16,17
	06	R6030		----------	NRSA6AJ-0R0W	MG RESISTOR	(Addition)	1	01,02,03,04,05,06,07,08,09,0A,0B,0C, 0D,0E,0F,10,11,12,13,14,15,16,17
	06	R6031		----------	NRSA6AJ-102W	MG RESISTOR	(Addition)	1	01,02,03,04,05,06,07,08,09,0A,0B,0C, 0D,0E,0F,10,11,12,13,14,15,16,17
	06	R6032		----------	NRSA6AJ-101W	MG RESISTOR	(Addition)	1	01,02,03,04,05,06,07,08,09,0A,0B,0C, 0D,0E,0F,10,11,12,13,14,15,16,17
	06	R6034		----------	NRSA6AJ-0R0W	MG RESISTOR	(Addition)	1	01,02,03,04,05,06,07,08,09,0A,0B,0C, 0D,0E,0F,10,11,12,13,14,15,16,17
	06	R6036		----------	NRSA6AJ-103W	MG RESISTOR	(Addition)	1	01,02,03,04,05,06,07,08,09,0A,0B,0C, 0D,0E,0F,10,11,12,13,14,15,16,17
	06	R6037		----------	NRSA6AJ-0R0W	MG RESISTOR	(Addition)	1	01,02,03,04,05,06,07,08,09,0A,0B,0C, 0D,0E,0F,10,11,12,13,14,15,16,17
	06	R6038		----------	NRSA6AJ-0R0W	MG RESISTOR	(Addition)	1	01,02,03,04,05,06,07,08,09,0A,0B,0C, 0D,0E,0F,10,11,12,13,14,15,16,17
	06	R6043		----------	NRSA6AJ-0R0W	MG RESISTOR	(Addition)	1	01,02,03,04,05,06,07,08,09,0A,0B,0C, 0D,0E,0F,10,11,12,13,14,15,16,17
	06	R6044		----------	NRSA6AJ-0R0W	MG RESISTOR	(Addition)	1	01,02,03,04,05,06,07,08,09,0A,0B,0C, 0D,0E,0F,10,11,12,13,14,15,16,17
	06	R6048		----------	NRSA6AJ-0R0W	MG RESISTOR	(Addition)	1	01,02,03,04,05,06,07,08,09,0A,0B,0C, 0D,0E,0F,10,11,12,13,14,15,16,17
	06	R6049		----------	NRSA6AJ-0R0W	MG RESISTOR	(Addition)	1	01,02,03,04,05,06,07,08,09,0A,0B,0C, 0D,0E,0F,10,11,12,13,14,15,16,17
	06	R6050		----------	NRSA6AJ-0R0W	MG RESISTOR	(Addition)	1	01,02,03,04,05,06,07,08,09,0A,0B,0C, 0D,0E,0F,10,11,12,13,14,15,16,17
	06	R6057		----------	NRSA6AD-123W	MG RESISTOR	(Addition)	1	01,02,03,04,05,06,07,08,09,0A,0B,0C, 0D,0E,0F,10,11,12,13,14,15,16,17
	06	R6058		----------	NRSA6AJ-0R0W	MG RESISTOR	(Addition)	1	01,02,03,04,05,06,07,08,09,0A,0B,0C, 0D,0E,0F,10,11,12,13,14,15,16,17
	06	R6059		----------	NRSA6AJ-752W	MG RESISTOR	(Addition)	1	01,02,03,04,05,06,07,08,09,0A,0B,0C, 0D,0E,0F,10,11,12,13,14,15,16,17
	06	R6060		----------	NRSA6AJ-622W	MG RESISTOR	(Addition)	1	01,02,03,04,05,06,07,08,09,0A,0B,0C, 0D,0E,0F,10,11,12,13,14,15,16,17
	06	R6061		----------	NRSA6AJ-272W	MG RESISTOR	(Addition)	1	01,02,03,04,05,06,07,08,09,0A,0B,0C, 0D,0E,0F,10,11,12,13,14,15,16,17
	06	R6062		----------	NRSA6AJ-471W	MG RESISTOR	(Addition)	1	01,02,03,04,05,06,07,08,09,0A,0B,0C, 0D,0E,0F,10,11,12,13,14,15,16,17
	06	R6063		----------	NRSA6AJ-471W	MG RESISTOR	(Addition)	1	01,02,03,04,05,06,07,08,09,0A,0B,0C, 0D,0E,0F,10,11,12,13,14,15,16,17
	06	R6064		----------	NRSA6AJ-0R0W	MG RESISTOR	(Addition)	1	01,02,03,04,05,06,07,08,09,0A,0B,0C, 0D,0E,0F,10,11,12,13,14,15,16,17
	06	R6065		----------	NRSA6AJ-0R0W	MG RESISTOR	(Addition)	1	01,02,03,04,05,06,07,08,09,0A,0B,0C, 0D,0E,0F,10,11,12,13,14,15,16,17
	06	R6066		----------	NRSA6AJ-103W	MG RESISTOR	(Addition)	1	01,02,03,04,05,06,07,08,09,0A,0B,0C, 0D,0E,0F,10,11,12,13,14,15,16,17
	06	R6068		----------	NRSA6AJ-681W	MG RESISTOR	(Addition)	1	01,02,03,04,05,06,07,08,09,0A,0B,0C, 0D,0E,0F,10,11,12,13,14,15,16,17
	06	R6069		----------	NRSA6AJ-0R0W	MG RESISTOR	(Addition)	1	01,02,03,04,05,06,07,08,09,0A,0B,0C, 0D,0E,0F,10,11,12,13,14,15,16,17
	06	R6070		----------	NRSA6AJ-0R0W	MG RESISTOR	(Addition)	1	01,02,03,04,05,06,07,08,09,0A,0B,0C, 0D,0E,0F,10,11,12,13,14,15,16,17
	06	R6071		----------	NRSA6AJ-0R0W	MG RESISTOR	(Addition)	1	01,02,03,04,05,06,07,08,09,0A,0B,0C, 0D,0E,0F,10,11,12,13,14,15,16,17
	06	R6072		----------	NRSA6AJ-103W	MG RESISTOR	(Addition)	1	01,02,03,04,05,06,07,08,09,0A,0B,0C, 0D,0E,0F,10,11,12,13,14,15,16,17
	06	R6074		----------	NRSA6AJ-0R0W	MG RESISTOR	(Addition)	1	01,02,03,04,05,06,07,08,09,0A,0B,0C, 0D,0E,0F,10,11,12,13,14,15,16,17
	06	R6076		----------	NRSA6AJ-0R0W	MG RESISTOR	(Addition)	1	01,02,03,04,05,06,07,08,09,0A,0B,0C, 0D,0E,0F,10,11,12,13,14,15,16,17

⚠	Symbol		or	Part No. <Rev.001>	Part No. <Rev.002>	Part Name	Description	Qty	Models
	06	R6077		----------	NRSA6AJ-0R0W	MG RESISTOR	(Addition)	1	01,02,03,04,05,06,07,08,09,0A,0B,0C, 0D,0E,0F,10,11,12,13,14,15,16,17
	06	R6078		----------	NRSA6AJ-103W	MG RESISTOR	(Addition)	1	01,02,03,04,05,06,07,08,09,0A,0B,0C, 0D,0E,0F,10,11,12,13,14,15,16,17
	06	R6079		----------	NRSA6AJ-220W	MG RESISTOR	(Addition)	1	01,02,03,04,05,06,07,08,09,0A,0B,0C, 0D,0E,0F,10,11,12,13,14,15,16,17
	06	R6080		----------	NRSA6AJ-220W	MG RESISTOR	(Addition)	1	01,02,03,04,05,06,07,08,09,0A,0B,0C, 0D,0E,0F,10,11,12,13,14,15,16,17
	06	R6081		----------	NRSA6AJ-220W	MG RESISTOR	(Addition)	1	01,02,03,04,05,06,07,08,09,0A,0B,0C, 0D,0E,0F,10,11,12,13,14,15,16,17
	06	R6082		----------	NRSA6AJ-220W	MG RESISTOR	(Addition)	1	01,02,03,04,05,06,07,08,09,0A,0B,0C, 0D,0E,0F,10,11,12,13,14,15,16,17
	06	R6083		----------	NRSA6AJ-220W	MG RESISTOR	(Addition)	1	01,02,03,04,05,06,07,08,09,0A,0B,0C, 0D,0E,0F,10,11,12,13,14,15,16,17
	06	R6084		----------	NRSA6AJ-220W	MG RESISTOR	(Addition)	1	01,02,03,04,05,06,07,08,09,0A,0B,0C, 0D,0E,0F,10,11,12,13,14,15,16,17
	06	R6085		----------	NRSA6AJ-220W	MG RESISTOR	(Addition)	1	01,02,03,04,05,06,07,08,09,0A,0B,0C, 0D,0E,0F,10,11,12,13,14,15,16,17
	06	R6086		----------	NRSA6AJ-101W	MG RESISTOR	(Addition)	1	01,02,03,04,05,06,07,08,09,0A,0B,0C, 0D,0E,0F,10,11,12,13,14,15,16,17
	06	R6087		----------	NRSA6AJ-330W	MG RESISTOR	(Addition)	1	01,02,03,04,05,06,07,08,09,0A,0B,0C, 0D,0E,0F,10,11,12,13,14,15,16,17
	06	R6089		----------	NRSA6AJ-0R0W	MG RESISTOR	(Addition)	1	01,02,03,04,05,06,07,08,09,0A,0B,0C, 0D,0E,0F,10,11,12,13,14,15,16,17
	06	R6091		----------	NRSA6AJ-101W	MG RESISTOR	(Addition)	1	01,02,03,04,05,06,07,08,09,0A,0B,0C, 0D,0E,0F,10,11,12,13,14,15,16,17
	06	R6092		----------	NRSA6AJ-330W	MG RESISTOR	(Addition)	1	01,02,03,04,05,06,07,08,09,0A,0B,0C, 0D,0E,0F,10,11,12,13,14,15,16,17
	06	R6093		----------	NRSA6AJ-0R0W	MG RESISTOR	(Addition)	1	01,02,03,04,05,06,07,08,09,0A,0B,0C, 0D,0E,0F,10,11,12,13,14,15,16,17
	06	R6097		----------	NRSA6AJ-330W	MG RESISTOR	(Addition)	1	01,02,03,04,05,06,07,08,09,0A,0B,0C, 0D,0E,0F,10,11,12,13,14,15,16,17
	06	R6098		----------	NRSA6AJ-330W	MG RESISTOR	(Addition)	1	01,02,03,04,05,06,07,08,09,0A,0B,0C, 0D,0E,0F,10,11,12,13,14,15,16,17
	06	R6099		----------	NRSA6AJ-330W	MG RESISTOR	(Addition)	1	01,02,03,04,05,06,07,08,09,0A,0B,0C, 0D,0E,0F,10,11,12,13,14,15,16,17
	06	R6100		----------	NRSA6AJ-330W	MG RESISTOR	(Addition)	1	01,02,03,04,05,06,07,08,09,0A,0B,0C, 0D,0E,0F,10,11,12,13,14,15,16,17
	06	R6101		----------	NRSA6AJ-221W	MG RESISTOR	(Addition)	1	01,02,03,04,05,06,07,08,09,0A,0B,0C, 0D,0E,0F,10,11,12,13,14,15,16,17
	06	R6102		----------	NRSA6AJ-221W	MG RESISTOR	(Addition)	1	01,02,03,04,05,06,07,08,09,0A,0B,0C, 0D,0E,0F,10,11,12,13,14,15,16,17
	06	R6103		----------	NRSA6AJ-471W	MG RESISTOR	(Addition)	1	01,02,03,04,05,06,07,08,09,0A,0B,0C, 0D,0E,0F,10,11,12,13,14,15,16,17
	06	R6105		----------	NRSA6AJ-391W	MG RESISTOR	(Addition)	1	01,02,03,04,05,06,07,08,09,0A,0B,0C, 0D,0E,0F,10,11,12,13,14,15,16,17
	06	R6106		----------	NRSA6AJ-152W	MG RESISTOR	(Addition)	1	01,02,03,04,05,06,07,08,09,0A,0B,0C, 0D,0E,0F,10,11,12,13,14,15,16,17
	06	R6113		----------	NRSA6AJ-103W	MG RESISTOR	(Addition)	1	01,02,03,04,05,06,07,08,09,0A,0B,0C, 0D,0E,0F,10,11,12,13,14,15,16,17
	06	R6114		----------	NRSA6AJ-103W	MG RESISTOR	(Addition)	1	01,02,03,04,05,06,07,08,09,0A,0B,0C, 0D,0E,0F,10,11,12,13,14,15,16,17
	06	R6115		----------	NRSA6AJ-103W	MG RESISTOR	(Addition)	1	01,02,03,04,05,06,07,08,09,0A,0B,0C, 0D,0E,0F,10,11,12,13,14,15,16,17
	06	R6116		----------	NRSA6AJ-103W	MG RESISTOR	(Addition)	1	01,02,03,04,05,06,07,08,09,0A,0B,0C, 0D,0E,0F,10,11,12,13,14,15,16,17
	06	R6117		----------	NRSA6AJ-103W	MG RESISTOR	(Addition)	1	01,02,03,04,05,06,07,08,09,0A,0B,0C, 0D,0E,0F,10,11,12,13,14,15,16,17
	06	R6118		----------	NRSA6AJ-0R0W	MG RESISTOR	(Addition)	1	01,02,03,04,05,06,07,08,09,0A,0B,0C, 0D,0E,0F,10,11,12,13,14,15,16,17
	06	R6201		----------	NRSA6AJ-102W	MG RESISTOR	(Addition)	1	01,02,03,04,05,06,07,08,09,0A,0B,0C, 0D,0E,0F,10,11,12,13,14,15,16,17
	06	R6202		----------	NRSA6AJ-102W	MG RESISTOR	(Addition)	1	01,02,03,04,05,06,07,08,09,0A,0B,0C, 0D,0E,0F,10,11,12,13,14,15,16,17
	06	R6212		----------	NRSA6AJ-0R0W	MG RESISTOR	(Addition)	1	01,02,03,04,05,06,07,08,09,0A,0B,0C, 0D,0E,0F,10,11,12,13,14,15,16,17
	06	R6213		----------	NRS181J-0R0X	MG RESISTOR	(Addition)	1	01,02,03,04,05,06,07,08,09,0A,0B,0C, 0D,0E,0F,10,11,12,13,14,15,16,17
	06	R6214		----------	NRSA02J-0R0X	MG RESISTOR	(Addition)	1	01,02,03,04,05,06,07,08,09,0A,0B,0C, 0D,0E,0F,10,11,12,13,14,15,16,17

⚠	Symbol		or	Part No. <Rev.001>	Part No. <Rev.002>	Part Name	Description	Qty	Models
	06	R6215		----------	NRSA6AJ-0R0W	MG RESISTOR	(Addition)	1	01,02,03,04,05,06,07,08,09,0A,0B,0C, 0D,0E,0F,10,11,12,13,14,15,16,17
	06	R6301		----------	NRSA6AJ-682W	MG RESISTOR	(Addition)	1	01,02,03,04,05,06,07,08,09,0A,0B,0C, 0D,0E,0F,10,11,12,13,14,15,16,17
	06	R6303		----------	NRSA6AJ-224W	MG RESISTOR	(Addition)	1	01,02,03,04,05,06,07,08,09,0A,0B,0C, 0D,0E,0F,10,11,12,13,14,15,16,17
	06	R6304		----------	NRSA6AJ-104W	MG RESISTOR	(Addition)	1	01,02,03,04,05,06,07,08,09,0A,0B,0C, 0D,0E,0F,10,11,12,13,14,15,16,17
	06	R6305		----------	NRSA6AJ-0R0W	MG RESISTOR	(Addition)	1	01,02,03,04,05,06,07,08,09,0A,0B,0C, 0D,0E,0F,10,11,12,13,14,15,16,17
	06	R6306		----------	NRSA63J-515X	MG RESISTOR	(Addition)	1	01,02,03,04,05,06,07,08,09,0A,0B,0C, 0D,0E,0F,10,11,12,13,14,15,16,17
	06	R6307		----------	NRSA63J-184X	MG RESISTOR	(Addition)	1	01,02,03,04,05,06,07,08,09,0A,0B,0C, 0D,0E,0F,10,11,12,13,14,15,16,17
	06	R6308		----------	NRSA63J-0R0X	MG RESISTOR	(Addition)	1	01,02,03,04,05,06,07,08,09,0A,0B,0C, 0D,0E,0F,10,11,12,13,14,15,16,17
	06	R6309		----------	NRSA63J-333X	MG RESISTOR	(Addition)	1	01,02,03,04,05,06,07,08,09,0A,0B,0C, 0D,0E,0F,10,11,12,13,14,15,16,17
	06	R6310		----------	NRSA6AJ-470W	MG RESISTOR	(Addition)	1	01,02,03,04,05,06,07,08,09,0A,0B,0C, 0D,0E,0F,10,11,12,13,14,15,16,17
	06	R6311		----------	NRSA6AJ-470W	MG RESISTOR	(Addition)	1	01,02,03,04,05,06,07,08,09,0A,0B,0C, 0D,0E,0F,10,11,12,13,14,15,16,17
	06	R6312		----------	NRSA63J-823X	MG RESISTOR	(Addition)	1	01,02,03,04,05,06,07,08,09,0A,0B,0C, 0D,0E,0F,10,11,12,13,14,15,16,17
	06	R6313		----------	NRSA63J-274X	MG RESISTOR	(Addition)	1	01,02,03,04,05,06,07,08,09,0A,0B,0C, 0D,0E,0F,10,11,12,13,14,15,16,17
	06	R6314		----------	NRSA6AJ-470W	MG RESISTOR	(Addition)	1	01,02,03,04,05,06,07,08,09,0A,0B,0C, 0D,0E,0F,10,11,12,13,14,15,16,17
	06	R6315		----------	NRSA6AJ-470W	MG RESISTOR	(Addition)	1	01,02,03,04,05,06,07,08,09,0A,0B,0C, 0D,0E,0F,10,11,12,13,14,15,16,17
	06	R6316		----------	NRSA6AJ-512W	MG RESISTOR	(Addition)	1	01,02,03,04,05,06,07,08,09,0A,0B,0C, 0D,0E,0F,10,11,12,13,14,15,16,17
	06	R6317		----------	NRSA6AJ-512W	MG RESISTOR	(Addition)	1	01,02,03,04,05,06,07,08,09,0A,0B,0C, 0D,0E,0F,10,11,12,13,14,15,16,17
	06	R6318		----------	NRSA63J-105X	MG RESISTOR	(Addition)	1	01,02,03,04,05,06,07,08,09,0A,0B,0C, 0D,0E,0F,10,11,12,13,14,15,16,17
	06	R6320		----------	NRSA63J-0R0X	MG RESISTOR	(Addition)	1	01,02,03,04,05,06,07,08,09,0A,0B,0C, 0D,0E,0F,10,11,12,13,14,15,16,17
	06	R6321		----------	NRSA63J-391X	MG RESISTOR	(Addition)	1	01,02,03,04,05,06,07,08,09,0A,0B,0C, 0D,0E,0F,10,11,12,13,14,15,16,17
	06	R6326		----------	NRSA6AJ-513W	MG RESISTOR	(Addition)	1	01,02,03,04,05,06,07,08,09,0A,0B,0C, 0D,0E,0F,10,11,12,13,14,15,16,17
	06	R6327		----------	NRSA6AJ-473W	MG RESISTOR	(Addition)	1	01,02,03,04,05,06,07,08,09,0A,0B,0C, 0D,0E,0F,10,11,12,13,14,15,16,17
	06	R6329		----------	NRSA6AJ-562W	MG RESISTOR	(Addition)	1	01,02,03,04,05,06,07,08,09,0A,0B,0C, 0D,0E,0F,10,11,12,13,14,15,16,17
	06	R6401		----------	NRSA6AJ-683W	MG RESISTOR	(Addition)	1	01,02,03,04,05,06,07,08,09,0A,0B,0C, 0D,0E,0F,10,11,12,13,14,15,16,17
	06	R6402		----------	NRSA6AJ-683W	MG RESISTOR	(Addition)	1	01,02,03,04,05,06,07,08,09,0A,0B,0C, 0D,0E,0F,10,11,12,13,14,15,16,17
	06	R6403		----------	NRSA6AJ-683W	MG RESISTOR	(Addition)	1	01,02,03,04,05,06,07,08,09,0A,0B,0C, 0D,0E,0F,10,11,12,13,14,15,16,17
	06	R6404		----------	NRSA6AJ-683W	MG RESISTOR	(Addition)	1	01,02,03,04,05,06,07,08,09,0A,0B,0C, 0D,0E,0F,10,11,12,13,14,15,16,17
	06	R6405		----------	NRSA6AJ-104W	MG RESISTOR	(Addition)	1	01,02,03,04,05,06,07,08,09,0A,0B,0C, 0D,0E,0F,10,11,12,13,14,15,16,17
	06	R6408		----------	NRSA6AJ-104W	MG RESISTOR	(Addition)	1	01,02,03,04,05,06,07,08,09,0A,0B,0C, 0D,0E,0F,10,11,12,13,14,15,16,17
	06	R6411		----------	NRSA6AJ-103W	MG RESISTOR	(Addition)	1	01,02,03,04,05,06,07,08,09,0A,0B,0C, 0D,0E,0F,10,11,12,13,14,15,16,17
	06	R6412		----------	NRSA6AJ-103W	MG RESISTOR	(Addition)	1	01,02,03,04,05,06,07,08,09,0A,0B,0C, 0D,0E,0F,10,11,12,13,14,15,16,17
	06	R6413		----------	NRSA6AJ-103W	MG RESISTOR	(Addition)	1	01,02,03,04,05,06,07,08,09,0A,0B,0C, 0D,0E,0F,10,11,12,13,14,15,16,17
	06	R6414		----------	NRSA6AJ-223W	MG RESISTOR	(Addition)	1	01,02,03,04,05,06,07,08,09,0A,0B,0C, 0D,0E,0F,10,11,12,13,14,15,16,17
	06	R6415		----------	NRSA6AJ-103W	MG RESISTOR	(Addition)	1	01,02,03,04,05,06,07,08,09,0A,0B,0C, 0D,0E,0F,10,11,12,13,14,15,16,17
	06	R6416		----------	NRSA6AJ-153W	MG RESISTOR	(Addition)	1	01,02,03,04,05,06,07,08,09,0A,0B,0C, 0D,0E,0F,10,11,12,13,14,15,16,17

⚠	Symbol		or	Part No. <Rev.001>	Part No. <Rev.002>	Part Name	Description	Qty	Models
	06	R6417		----------	NRSA6AJ-103W	MG RESISTOR	(Addition)	1	01,02,03,04,05,06,07,08,09,0A,0B,0C, 0D,0E,0F,10,11,12,13,14,15,16,17
	06	R6418		----------	NRSA6AJ-103W	MG RESISTOR	(Addition)	1	01,02,03,04,05,06,07,08,09,0A,0B,0C, 0D,0E,0F,10,11,12,13,14,15,16,17
	06	R6419		----------	NRSA6AJ-103W	MG RESISTOR	(Addition)	1	01,02,03,04,05,06,07,08,09,0A,0B,0C, 0D,0E,0F,10,11,12,13,14,15,16,17
	06	R6420		----------	NRSA6AJ-103W	MG RESISTOR	(Addition)	1	01,02,03,04,05,06,07,08,09,0A,0B,0C, 0D,0E,0F,10,11,12,13,14,15,16,17
	06	R6421		----------	NRSA6AJ-103W	MG RESISTOR	(Addition)	1	01,02,03,04,05,06,07,08,09,0A,0B,0C, 0D,0E,0F,10,11,12,13,14,15,16,17
	06	R6422		----------	NRSA6AJ-103W	MG RESISTOR	(Addition)	1	01,02,03,04,05,06,07,08,09,0A,0B,0C, 0D,0E,0F,10,11,12,13,14,15,16,17
	06	R6423		----------	NRSA6AJ-273W	MG RESISTOR	(Addition)	1	01,02,03,04,05,06,07,08,09,0A,0B,0C, 0D,0E,0F,10,11,12,13,14,15,16,17
	06	R6424		----------	NRSA6AJ-392W	MG RESISTOR	(Addition)	1	01,02,03,04,05,06,07,08,09,0A,0B,0C, 0D,0E,0F,10,11,12,13,14,15,16,17
	06	R6426		----------	NRSA6AJ-103W	MG RESISTOR	(Addition)	1	01,02,03,04,05,06,07,08,09,0A,0B,0C, 0D,0E,0F,10,11,12,13,14,15,16,17
	06	R6427		----------	NRSA6AJ-103W	MG RESISTOR	(Addition)	1	01,02,03,04,05,06,07,08,09,0A,0B,0C, 0D,0E,0F,10,11,12,13,14,15,16,17
	06	R6428		----------	NRSA6AJ-101W	MG RESISTOR	(Addition)	1	01,02,03,04,05,06,07,08,09,0A,0B,0C, 0D,0E,0F,10,11,12,13,14,15,16,17
	06	R6429		----------	NRSA6AJ-103W	MG RESISTOR	(Addition)	1	01,02,03,04,05,06,07,08,09,0A,0B,0C, 0D,0E,0F,10,11,12,13,14,15,16,17
	06	R6430		----------	NRSA6AJ-103W	MG RESISTOR	(Addition)	1	01,02,03,04,05,06,07,08,09,0A,0B,0C, 0D,0E,0F,10,11,12,13,14,15,16,17
	06	R6431		----------	NRSA63J-390X	MG RESISTOR	(Addition)	1	01,02,03,04,05,06,07,08,09,0A,0B,0C, 0D,0E,0F,10,11,12,13,14,15,16,17
	06	R6432		----------	NRSA6AJ-2R2W	MG RESISTOR	(Addition)	1	01,02,03,04,05,06,07,08,09,0A,0B,0C, 0D,0E,0F,10,11,12,13,14,15,16,17
	06	R6433		----------	NRSA6AJ-2R2W	MG RESISTOR	(Addition)	1	01,02,03,04,05,06,07,08,09,0A,0B,0C, 0D,0E,0F,10,11,12,13,14,15,16,17
	06	R6434		----------	NRSA63J-390X	MG RESISTOR	(Addition)	1	01,02,03,04,05,06,07,08,09,0A,0B,0C, 0D,0E,0F,10,11,12,13,14,15,16,17
	06	R6435		----------	NRSA6AJ-100W	MG RESISTOR	(Addition)	1	01,02,03,04,05,06,07,08,09,0A,0B,0C, 0D,0E,0F,10,11,12,13,14,15,16,17
	06	R6452		----------	NRSA6AJ-0R0W	MG RESISTOR	(Addition)	1	01,02,03,04,05,06,07,08,09,0A,0B,0C, 0D,0E,0F,10,11,12,13,14,15,16,17
	06	R6454		----------	NRSA6AJ-0R0W	MG RESISTOR	(Addition)	1	01,02,03,04,05,06,07,08,09,0A,0B,0C, 0D,0E,0F,10,11,12,13,14,15,16,17
	06	R6456		----------	NRSA6AJ-0R0W	MG RESISTOR	(Addition)	1	01,02,03,04,05,06,07,08,09,0A,0B,0C, 0D,0E,0F,10,11,12,13,14,15,16,17
	06	R6458		----------	NRSA6AJ-0R0W	MG RESISTOR	(Addition)	1	01,02,03,04,05,06,07,08,09,0A,0B,0C, 0D,0E,0F,10,11,12,13,14,15,16,17
	06	R6461		----------	NRSA6AD-240W	MG RESISTOR	(Addition)	1	01,02,03,04,05,06,07,08,09,0A,0B,0C, 0D,0E,0F,10,11,12,13,14,15,16,17
	06	R6462		----------	NRSA6AD-221W	MG RESISTOR	(Addition)	1	01,02,03,04,05,06,07,08,09,0A,0B,0C, 0D,0E,0F,10,11,12,13,14,15,16,17
	06	R6463		----------	NRSA6AD-820W	MG RESISTOR	(Addition)	1	01,02,03,04,05,06,07,08,09,0A,0B,0C, 0D,0E,0F,10,11,12,13,14,15,16,17
	06	R6464		----------	NRSA6AD-470W	MG RESISTOR	(Addition)	1	01,02,03,04,05,06,07,08,09,0A,0B,0C, 0D,0E,0F,10,11,12,13,14,15,16,17
	06	R6465		----------	NRSA6AD-390W	MG RESISTOR	(Addition)	1	01,02,03,04,05,06,07,08,09,0A,0B,0C, 0D,0E,0F,10,11,12,13,14,15,16,17
	06	R6466		----------	NRSA6AD-430W	MG RESISTOR	(Addition)	1	01,02,03,04,05,06,07,08,09,0A,0B,0C, 0D,0E,0F,10,11,12,13,14,15,16,17
	06	R6467		----------	NRSA6AD-470W	MG RESISTOR	(Addition)	1	01,02,03,04,05,06,07,08,09,0A,0B,0C, 0D,0E,0F,10,11,12,13,14,15,16,17
	06	R6468		----------	NRSA6AD-680W	MG RESISTOR	(Addition)	1	01,02,03,04,05,06,07,08,09,0A,0B,0C, 0D,0E,0F,10,11,12,13,14,15,16,17
	06	R6469		----------	NRSA6AD-161W	MG RESISTOR	(Addition)	1	01,02,03,04,05,06,07,08,09,0A,0B,0C, 0D,0E,0F,10,11,12,13,14,15,16,17
	06	R6470		----------	NRSA6AD-201W	MG RESISTOR	(Addition)	1	01,02,03,04,05,06,07,08,09,0A,0B,0C, 0D,0E,0F,10,11,12,13,14,15,16,17
	06	R6471		----------	NRSA6AD-100W	MG RESISTOR	(Addition)	1	01,02,03,04,05,06,07,08,09,0A,0B,0C, 0D,0E,0F,10,11,12,13,14,15,16,17
	06	R6472		----------	NRSA6AD-100W	MG RESISTOR	(Addition)	1	01,02,03,04,05,06,07,08,09,0A,0B,0C, 0D,0E,0F,10,11,12,13,14,15,16,17
	06	R6473		----------	NRSA6AJ-0R0W	MG RESISTOR	(Addition)	1	01,02,03,04,05,06,07,08,09,0A,0B,0C, 0D,0E,0F,10,11,12,13,14,15,16,17

⚠	Symbol		or	Part No. <Rev.001>	Part No. <Rev.002>	Part Name	Description	Qty	Models
	06	R6477		----------	NRSA6AJ-0R0W	MG RESISTOR	(Addition)	1	01,02,03,04,05,06,07,08,09,0A,0B,0C, 0D,0E,0F,10,11,12,13,14,15,16,17
	06	R6478		----------	NRSA6AJ-0R0W	MG RESISTOR	(Addition)	1	01,02,03,04,05,06,07,08,09,0A,0B,0C, 0D,0E,0F,10,11,12,13,14,15,16,17
	06	R6479		----------	NRSA6AJ-0R0W	MG RESISTOR	(Addition)	1	01,02,03,04,05,06,07,08,09,0A,0B,0C, 0D,0E,0F,10,11,12,13,14,15,16,17
	06	R6481		----------	NRSA6AJ-0R0W	MG RESISTOR	(Addition)	1	01,02,03,04,05,06,07,08,09,0A,0B,0C, 0D,0E,0F,10,11,12,13,14,15,16,17
	06	R6483		----------	NRSA6AJ-0R0W	MG RESISTOR	(Addition)	1	01,02,03,04,05,06,07,08,09,0A,0B,0C, 0D,0E,0F,10,11,12,13,14,15,16,17
	06	R6485		----------	NRSA6AJ-0R0W	MG RESISTOR	(Addition)	1	01,02,03,04,05,06,07,08,09,0A,0B,0C, 0D,0E,0F,10,11,12,13,14,15,16,17
	06	R6487		----------	NRSA6AJ-0R0W	MG RESISTOR	(Addition)	1	01,02,03,04,05,06,07,08,09,0A,0B,0C, 0D,0E,0F,10,11,12,13,14,15,16,17
	06	R6488		----------	NRSA6AJ-0R0W	MG RESISTOR	(Addition)	1	01,02,03,04,05,06,07,08,09,0A,0B,0C, 0D,0E,0F,10,11,12,13,14,15,16,17
	06	R6491		----------	NRSA6AJ-0R0W	MG RESISTOR	(Addition)	1	01,02,03,04,05,06,07,08,09,0A,0B,0C, 0D,0E,0F,10,11,12,13,14,15,16,17
	06	R6492		----------	NRSA6AJ-0R0W	MG RESISTOR	(Addition)	1	01,02,03,04,05,06,07,08,09,0A,0B,0C, 0D,0E,0F,10,11,12,13,14,15,16,17
	06	R6493		----------	NRSA6AJ-0R0W	MG RESISTOR	(Addition)	1	01,02,03,04,05,06,07,08,09,0A,0B,0C, 0D,0E,0F,10,11,12,13,14,15,16,17
	06	R6494		----------	NRSA6AJ-0R0W	MG RESISTOR	(Addition)	1	01,02,03,04,05,06,07,08,09,0A,0B,0C, 0D,0E,0F,10,11,12,13,14,15,16,17
	06	R6495		----------	NRSA6AJ-0R0W	MG RESISTOR	(Addition)	1	01,02,03,04,05,06,07,08,09,0A,0B,0C, 0D,0E,0F,10,11,12,13,14,15,16,17
	06	R6496		----------	NRSA6AJ-0R0W	MG RESISTOR	(Addition)	1	01,02,03,04,05,06,07,08,09,0A,0B,0C, 0D,0E,0F,10,11,12,13,14,15,16,17
	06	R6497		----------	NRSA6AJ-0R0W	MG RESISTOR	(Addition)	1	01,02,03,04,05,06,07,08,09,0A,0B,0C, 0D,0E,0F,10,11,12,13,14,15,16,17
	06	R6498		----------	NRSA6AJ-0R0W	MG RESISTOR	(Addition)	1	01,02,03,04,05,06,07,08,09,0A,0B,0C, 0D,0E,0F,10,11,12,13,14,15,16,17
	06	R6502		----------	NRSA6AJ-103W	MG RESISTOR	(Addition)	1	01,02,03,04,05,06,07,08,09,0A,0B,0C, 0D,0E,0F,10,11,12,13,14,15,16,17
	06	R6506		----------	NRSA6AJ-103W	MG RESISTOR	(Addition)	1	01,02,03,04,05,06,07,08,09,0A,0B,0C, 0D,0E,0F,10,11,12,13,14,15,16,17
	06	R6701		----------	NRSA63J-101X	MG RESISTOR	(Addition)	1	01,0A,0B,0C,0D,0E,0F,10,11,12,13,14, 15,16,17
	06	R6701		----------	NRSA63J-331X	MG RESISTOR	(Addition)	1	02,03,04,05,06,07,08,09
	06	R6702		----------	NRSA63J-562X	MG RESISTOR	(Addition)	1	01,0A,0B,0C,0D,0E,0F,10,11,12,13,14, 15,16,17
	06	R6702		----------	NRSA63J-432X	MG RESISTOR	(Addition)	1	02,03,04,05,06,07,08,09
	06	R6703		----------	NRSA63J-562X	MG RESISTOR	(Addition)	1	01,0A,0B,0C,0D,0E,0F,10,11,12,13,14, 15,16,17
	06	R6703		----------	NRSA63J-432X	MG RESISTOR	(Addition)	1	02,03,04,05,06,07,08,09
	06	R6704		----------	NRSA63J-562X	MG RESISTOR	(Addition)	1	01,0A,0B,0C,0D,0E,0F,10,11,12,13,14, 15,16,17
	06	R6704		----------	NRSA63J-432X	MG RESISTOR	(Addition)	1	02,03,04,05,06,07,08,09
	06	R6706		----------	NRSA02J-222X	MG RESISTOR	(Addition)	1	01,02,03,04,05,06,07,08,09,0A,0B,0C, 0D,0E,0F,10,11,12,13,14,15,16,17
	06	R6707		----------	NRSA02J-222X	MG RESISTOR	(Addition)	1	01,02,03,04,05,06,07,08,09,0A,0B,0C, 0D,0E,0F,10,11,12,13,14,15,16,17
	06	R6708		----------	NRSA63J-182X	MG RESISTOR	(Addition)	1	01,0A,0B,0C,0D,0E,0F,10,11,12,13,14, 15,16,17
	06	R6708		----------	NRSA63J-302X	MG RESISTOR	(Addition)	1	02,03,04,05,06,07,08,09
	06	R6709		----------	NRSA63J-242X	MG RESISTOR	(Addition)	1	01,0A,0B,0C,0D,0E,0F,10,11,12,13,14, 15,16,17
	06	R6709		----------	NRSA63J-332X	MG RESISTOR	(Addition)	1	02,03,04,05,06,07,08,09
	06	R6710		----------	NRSA63J-182X	MG RESISTOR	(Addition)	1	01,0A,0B,0C,0D,0E,0F,10,11,12,13,14, 15,16,17
	06	R6710		----------	NRSA63J-302X	MG RESISTOR	(Addition)	1	02,03,04,05,06,07,08,09
	06	R6711		----------	NRSA63J-182X	MG RESISTOR	(Addition)	1	01,0A,0B,0C,0D,0E,0F,10,11,12,13,14, 15,16,17
	06	R6711		----------	NRSA63J-302X	MG RESISTOR	(Addition)	1	02,03,04,05,06,07,08,09
	06	R6712		----------	NRSA63J-242X	MG RESISTOR	(Addition)	1	01,0A,0B,0C,0D,0E,0F,10,11,12,13,14, 15,16,17
	06	R6712		----------	NRSA63J-332X	MG RESISTOR	(Addition)	1	02,03,04,05,06,07,08,09
	06	R6713		----------	NRSA63J-562X	MG RESISTOR	(Addition)	1	01,02,03,04,05,06,07,08,09,0A,0B,0C, 0D,0E,0F,10,11,12,13,14,15,16,17

⚠	Symbol		or	Part No. <Rev.001>	Part No. <Rev.002>	Part Name	Description	Qty	Models
	06	R6714		----------	NRSA63J-473X	MG RESISTOR	(Addition)	1	01,02,03,04,05,06,07,08,09,0A,0B,0C,0D,0E,0F,10,11,12,13,14,15,16,17
	06	R6715		----------	NRSA63J-562X	MG RESISTOR	(Addition)	1	01,02,03,04,05,06,07,08,09,0A,0B,0C,0D,0E,0F,10,11,12,13,14,15,16,17
	06	R6716		----------	NRSA63J-473X	MG RESISTOR	(Addition)	1	01,02,03,04,05,06,07,08,09,0A,0B,0C,0D,0E,0F,10,11,12,13,14,15,16,17
	06	R6717		----------	NRSA02J-222X	MG RESISTOR	(Addition)	1	01,02,03,04,05,06,07,08,09,0A,0B,0C,0D,0E,0F,10,11,12,13,14,15,16,17
	06	R6718		----------	NRSA63J-242X	MG RESISTOR	(Addition)	1	01,0A,0B,0C,0D,0E,0F,10,11,12,13,14,15,16,17
	06	R6718		----------	NRSA63J-332X	MG RESISTOR	(Addition)	1	02,03,04,05,06,07,08,09
	06	R6719		----------	NRSA63J-242X	MG RESISTOR	(Addition)	1	01,0A,0B,0C,0D,0E,0F,10,11,12,13,14,15,16,17
	06	R6719		----------	NRSA63J-332X	MG RESISTOR	(Addition)	1	02,03,04,05,06,07,08,09
	06	R6720		----------	NRSA63J-152X	MG RESISTOR	(Addition)	1	01,0A,0B,0C,0D,0E,0F,10,11,12,13,14,15,16,17
	06	R6721		----------	NRSA63J-182X	MG RESISTOR	(Addition)	1	01,0A,0B,0C,0D,0E,0F,10,11,12,13,14,15,16,17
	06	R6722		----------	NRSA63J-182X	MG RESISTOR	(Addition)	1	01,0A,0B,0C,0D,0E,0F,10,11,12,13,14,15,16,17
	06	R6723		----------	NRSA63J-152X	MG RESISTOR	(Addition)	1	01,0A,0B,0C,0D,0E,0F,10,11,12,13,14,15,16,17
	06	R6724		----------	NRSA02J-222X	MG RESISTOR	(Addition)	1	01,02,03,04,05,06,07,08,09,0A,0B,0C,0D,0E,0F,10,11,12,13,14,15,16,17
	06	R6725		----------	NRSA63J-182X	MG RESISTOR	(Addition)	1	01,0A,0B,0C,0D,0E,0F,10,11,12,13,14,15,16,17
	06	R6725		----------	NRSA63J-302X	MG RESISTOR	(Addition)	1	02,03,04,05,06,07,08,09
	06	R6801		----------	NRSA63J-0R0X	MG RESISTOR	(Addition)	1	01,02,03,04,05,06,07,08,09,0A,0B,0C,0D,0E,0F,10,11,12,13,14,15,16,17
	06	R6802		----------	NRSA63J-0R0X	MG RESISTOR	(Addition)	1	01,02,03,04,05,06,07,08,09,0A,0B,0C,0D,0E,0F,10,11,12,13,14,15,16,17
	06	R6803		----------	NRSA63J-0R0X	MG RESISTOR	(Addition)	1	01,02,03,04,05,06,07,08,09,0A,0B,0C,0D,0E,0F,10,11,12,13,14,15,16,17
	06	R6804		----------	NRSA63J-0R0X	MG RESISTOR	(Addition)	1	01,02,03,04,05,06,07,08,09,0A,0B,0C,0D,0E,0F,10,11,12,13,14,15,16,17
	06	R6817		----------	NRSA6AJ-470W	MG RESISTOR	(Addition)	1	01,02,03,04,05,06,07,08,09,0A,0B,0C,0D,0E,0F,10,11,12,13,14,15,16,17
	06	R6818		----------	NRSA6AJ-101W	MG RESISTOR	(Addition)	1	01,02,03,04,05,06,07,08,09,0A,0B,0C,0D,0E,0F,10,11,12,13,14,15,16,17
	06	R6819		----------	NRSA6AJ-683W	MG RESISTOR	(Addition)	1	01,02,03,04,05,06,07,08,09,0A,0B,0C,0D,0E,0F,10,11,12,13,14,15,16,17
	06	R6820		----------	NRSA6AJ-683W	MG RESISTOR	(Addition)	1	01,02,03,04,05,06,07,08,09,0A,0B,0C,0D,0E,0F,10,11,12,13,14,15,16,17
	06	R6822		----------	NRSA6AJ-103W	MG RESISTOR	(Addition)	1	01,02,03,04,05,06,07,08,09,0A,0B,0C,0D,0E,0F,10,11,12,13,14,15,16,17
	06	R6823		----------	NRSA6AJ-472W	MG RESISTOR	(Addition)	1	01,02,03,04,05,06,07,08,09,0A,0B,0C,0D,0E,0F,10,11,12,13,14,15,16,17
	06	R6824		----------	NRSA6AJ-182W	MG RESISTOR	(Addition)	1	01,02,03,04,05,06,07,08,09,0A,0B,0C,0D,0E,0F,10,11,12,13,14,15,16,17
	06	R6826		----------	NRSA6AJ-332W	MG RESISTOR	(Addition)	1	01,02,03,04,05,06,07,08,09,0A,0B,0C,0D,0E,0F,10,11,12,13,14,15,16,17
	06	R6827		----------	NRSA6AJ-223W	MG RESISTOR	(Addition)	1	01,02,03,04,05,06,07,08,09,0A,0B,0C,0D,0E,0F,10,11,12,13,14,15,16,17
	06	R6828		----------	NRSA6AJ-332W	MG RESISTOR	(Addition)	1	01,02,03,04,05,06,07,08,09,0A,0B,0C,0D,0E,0F,10,11,12,13,14,15,16,17
	06	R6829		----------	NRSA6AJ-223W	MG RESISTOR	(Addition)	1	01,02,03,04,05,06,07,08,09,0A,0B,0C,0D,0E,0F,10,11,12,13,14,15,16,17
	06	R6830		----------	NRSA63J-222X	MG RESISTOR	(Addition)	1	01,02,03,04,05,06,07,08,09,0A,0B,0C,0D,0E,0F,10,11,12,13,14,15,16,17
	06	R6832		----------	NRSA6AJ-332W	MG RESISTOR	(Addition)	1	01,02,03,04,05,06,07,08,09,0A,0B,0C,0D,0E,0F,10,11,12,13,14,15,16,17
	06	R6833		----------	NRSA6AJ-223W	MG RESISTOR	(Addition)	1	01,02,03,04,05,06,07,08,09,0A,0B,0C,0D,0E,0F,10,11,12,13,14,15,16,17
	06	R6834		----------	NRSA6AJ-222W	MG RESISTOR	(Addition)	1	01,02,03,04,05,06,07,08,09,0A,0B,0C,0D,0E,0F,10,11,12,13,14,15,16,17
	06	R6836		----------	NRSA6AJ-332W	MG RESISTOR	(Addition)	1	01,02,03,04,05,06,07,08,09,0A,0B,0C,0D,0E,0F,10,11,12,13,14,15,16,17
	06	R6837		----------	NRSA6AJ-223W	MG RESISTOR	(Addition)	1	01,02,03,04,05,06,07,08,09,0A,0B,0C,0D,0E,0F,10,11,12,13,14,15,16,17
	06	R8501		----------	NRSA63J-751X	MG RESISTOR	(Addition)	1	01,02,03,04,05,06,07,08,09,0A,0B,0C,0D,0E,0F,10,11,12,13,14,15,16,17

⚠	Symbol		or	Part No. <Rev.001>	Part No. <Rev.002>	Part Name	Description	Qty	Models
	06	R8503		----------	NRSA63J-393X	MG RESISTOR	(Addition)	1	01,02,03,04,05,06,07,08,09,0A,0B,0C, 0D,0E,0F,10,11,12,13,14,15,16,17
	06	R8504		----------	NRSA63J-333X	MG RESISTOR	(Addition)	1	01,02,03,04,05,06,07,08,09,0A,0B,0C, 0D,0E,0F,10,11,12,13,14,15,16,17
	06	R8505		----------	NRSA63J-333X	MG RESISTOR	(Addition)	1	01,02,03,04,05,06,07,08,09,0A,0B,0C, 0D,0E,0F,10,11,12,13,14,15,16,17
	06	R8507		----------	NRSA63J-682X	MG RESISTOR	(Addition)	1	01,02,03,04,05,06,07,08,09,0A,0B,0C, 0D,0E,0F,10,11,12,13,14,15,16,17
	06	R8508		----------	NRSA63J-222X	MG RESISTOR	(Addition)	1	01,02,03,04,05,06,07,08,09,0A,0B,0C, 0D,0E,0F,10,11,12,13,14,15,16,17
	06	R8509		----------	NRSA63J-102X	MG RESISTOR	(Addition)	1	01,02,03,04,05,06,07,08,09,0A,0B,0C, 0D,0E,0F,10,11,12,13,14,15,16,17
	06	R8510		----------	NRSA63J-151X	MG RESISTOR	(Addition)	1	01,02,03,04,05,06,07,08,09,0A,0B,0C, 0D,0E,0F,10,11,12,13,14,15,16,17
	06	RA601		----------	NRZ0034-680W	NET RESISTOR	(Addition)	1	01,02,03,04,05,06,07,08,09,0A,0B,0C, 0D,0E,0F,10,11,12,13,14,15,16,17
	06	RA602		----------	NRZ0034-680W	NET RESISTOR	(Addition)	1	01,02,03,04,05,06,07,08,09,0A,0B,0C, 0D,0E,0F,10,11,12,13,14,15,16,17
	06	RA603		----------	NRZ0034-680W	NET RESISTOR	(Addition)	1	01,02,03,04,05,06,07,08,09,0A,0B,0C, 0D,0E,0F,10,11,12,13,14,15,16,17
	06	RA604		----------	NRZ0034-680W	NET RESISTOR	(Addition)	1	01,02,03,04,05,06,07,08,09,0A,0B,0C, 0D,0E,0F,10,11,12,13,14,15,16,17
	06	RA605		----------	NRZ0034-680W	NET RESISTOR	(Addition)	1	01,02,03,04,05,06,07,08,09,0A,0B,0C, 0D,0E,0F,10,11,12,13,14,15,16,17
	06	RA606		----------	NRZ0034-680W	NET RESISTOR	(Addition)	1	01,02,03,04,05,06,07,08,09,0A,0B,0C, 0D,0E,0F,10,11,12,13,14,15,16,17
	06	RA607		----------	NRZ0034-680W	NET RESISTOR	(Addition)	1	01,02,03,04,05,06,07,08,09,0A,0B,0C, 0D,0E,0F,10,11,12,13,14,15,16,17
	06	RA608		----------	NRZ0034-680W	NET RESISTOR	(Addition)	1	01,02,03,04,05,06,07,08,09,0A,0B,0C, 0D,0E,0F,10,11,12,13,14,15,16,17
	06	RA609		----------	NRZ0034-680W	NET RESISTOR	(Addition)	1	01,02,03,04,05,06,07,08,09,0A,0B,0C, 0D,0E,0F,10,11,12,13,14,15,16,17
	06	RA610		----------	NRZ0034-330W	NET RESISTOR	(Addition)	1	01,02,03,04,05,06,07,08,09,0A,0B,0C, 0D,0E,0F,10,11,12,13,14,15,16,17
	06	RA611		----------	NRZ0034-330W	NET RESISTOR	(Addition)	1	01,02,03,04,05,06,07,08,09,0A,0B,0C, 0D,0E,0F,10,11,12,13,14,15,16,17
	06	RA612		----------	NRZ0034-330W	NET RESISTOR	(Addition)	1	01,02,03,04,05,06,07,08,09,0A,0B,0C, 0D,0E,0F,10,11,12,13,14,15,16,17
	06	RA613		----------	NRZ0034-330W	NET RESISTOR	(Addition)	1	01,02,03,04,05,06,07,08,09,0A,0B,0C, 0D,0E,0F,10,11,12,13,14,15,16,17
	06	RA614		----------	NRZ0034-330W	NET RESISTOR	(Addition)	1	01,02,03,04,05,06,07,08,09,0A,0B,0C, 0D,0E,0F,10,11,12,13,14,15,16,17
	06	RA615		----------	NRZ0034-330W	NET RESISTOR	(Addition)	1	01,02,03,04,05,06,07,08,09,0A,0B,0C, 0D,0E,0F,10,11,12,13,14,15,16,17
	06	RA616		----------	NRZ0034-330W	NET RESISTOR	(Addition)	1	01,02,03,04,05,06,07,08,09,0A,0B,0C, 0D,0E,0F,10,11,12,13,14,15,16,17
	06	RA617		----------	NRZ0034-330W	NET RESISTOR	(Addition)	1	01,02,03,04,05,06,07,08,09,0A,0B,0C, 0D,0E,0F,10,11,12,13,14,15,16,17
	06	RA618		----------	NRZ0034-330W	NET RESISTOR	(Addition)	1	01,02,03,04,05,06,07,08,09,0A,0B,0C, 0D,0E,0F,10,11,12,13,14,15,16,17
	06	RA619		----------	NRZ0034-330W	NET RESISTOR	(Addition)	1	01,02,03,04,05,06,07,08,09,0A,0B,0C, 0D,0E,0F,10,11,12,13,14,15,16,17
	06	RA620		----------	NRZ0034-330W	NET RESISTOR	(Addition)	1	01,02,03,04,05,06,07,08,09,0A,0B,0C, 0D,0E,0F,10,11,12,13,14,15,16,17
	06	RA621		----------	NRZ0034-330W	NET RESISTOR	(Addition)	1	01,02,03,04,05,06,07,08,09,0A,0B,0C, 0D,0E,0F,10,11,12,13,14,15,16,17
	06	RA622		----------	NRZ0034-330W	NET RESISTOR	(Addition)	1	01,02,03,04,05,06,07,08,09,0A,0B,0C, 0D,0E,0F,10,11,12,13,14,15,16,17
	06	L601		----------	NQL382M-100X	COIL	(Addition)	1	01,02,03,04,05,06,07,08,09,0A,0B,0C, 0D,0E,0F,10,11,12,13,14,15,16,17
	06	L6001		----------	NQL382M-220X	COIL	(Addition)	1	01,02,03,04,05,06,07,08,09,0A,0B,0C, 0D,0E,0F,10,11,12,13,14,15,16,17
	06	L6004		----------	NQL382M-220X	COIL	(Addition)	1	01,02,03,04,05,06,07,08,09,0A,0B,0C, 0D,0E,0F,10,11,12,13,14,15,16,17
	06	L6005		----------	NQL085J-470X	COIL	(Addition)	1	01,02,03,04,05,06,07,08,09,0A,0B,0C, 0D,0E,0F,10,11,12,13,14,15,16,17
	06	L6301		----------	NQL382M-470X	COIL	(Addition)	1	01,02,03,04,05,06,07,08,09,0A,0B,0C, 0D,0E,0F,10,11,12,13,14,15,16,17
	06	L6302		----------	NQL52EM-100X	COIL	(Addition)	1	01,02,03,04,05,06,07,08,09,0A,0B,0C, 0D,0E,0F,10,11,12,13,14,15,16,17

⚠	Symbol		or	Part No. <Rev.001>	Part No. <Rev.002>	Part Name	Description	Qty	Models
	06	L6401		----------	NQL79GM-220X	COIL	(Addition)	1	01,02,03,04,05,06,07,08,09,0A,0B,0C, 0D,0E,0F,10,11,12,13,14,15,16,17
	06	L6402		----------	NQL79GM-220X	COIL	(Addition)	1	01,02,03,04,05,06,07,08,09,0A,0B,0C, 0D,0E,0F,10,11,12,13,14,15,16,17
	06	L6481		----------	NQL382M-470X	COIL	(Addition)	1	01,02,03,04,05,06,07,08,09,0A,0B,0C, 0D,0E,0F,10,11,12,13,14,15,16,17
	06	L6482		----------	NQL382M-470X	COIL	(Addition)	1	01,02,03,04,05,06,07,08,09,0A,0B,0C, 0D,0E,0F,10,11,12,13,14,15,16,17
⚠	06	T6301		----------	NQR0636-001	C FL TRANSF	(Addition)	1	01,02,03,04,05,06,07,08,09,0A,0B,0C, 0D,0E,0F,10,11,12,13,14,15,16,17
	06	CN601		----------	QGF0523F2-16W	CONNECTOR	(Addition)	1	01,02,03,04,05,06,07,08,09,0A,0B,0C, 0D,0E,0F,10,11,12,13,14,15,16,17
	06	CN602		----------	QGF1039F2-04X	CONNECTOR	(Addition)	1	01,02,03,04,05,06,07,08,09,0A,0B,0C, 0D,0E,0F,10,11,12,13,14,15,16,17
	06	CN603		----------	QGF0522F3-45W	CONNECTOR	(Addition)	1	01,02,03,04,05,06,07,08,09,0A,0B,0C, 0D,0E,0F,10,11,12,13,14,15,16,17
	06	CN606		----------	QGF0534F2-60X	CONNECTOR	(Addition)	1	01,02,03,04,05,06,07,08,09,0A,0B,0C, 0D,0E,0F,10,11,12,13,14,15,16,17
	06	CN607		----------	QGA8002F1-02X	CONNECTOR	(Addition)	1	01,02,03,04,05,06,07,08,09,0A,0B,0C, 0D,0E,0F,10,11,12,13,14,15,16,17
	06	CN671		----------	QGF0545F3-16X	CONNECTOR	(Addition)	1	01,02,03,04,05,06,07,08,09,0A,0B,0C, 0D,0E,0F,10,11,12,13,14,15,16,17
	06	CN851		----------	QGA1002C1-06X	CONNECTOR	(Addition)	1	01,02,03,04,05,06,07,08,09,0A,0B,0C, 0D,0E,0F,10,11,12,13,14,15,16,17
	06	CN852		----------	QGA1002C1-02X	CONNECTOR	(Addition)	1	01,02,03,04,05,06,07,08,09,0A,0B,0C, 0D,0E,0F,10,11,12,13,14,15,16,17
	06	S671		----------	NSW0312-001X	TACT SWITCH	(Addition)	1	01,02,03,04,05,06,07,08,09,0A,0B,0C, 0D,0E,0F,10,11,12,13,14,15,16,17
	06	S672		----------	NSW0312-001X	TACT SWITCH	(Addition)	1	01,02,03,04,05,06,07,08,09,0A,0B,0C, 0D,0E,0F,10,11,12,13,14,15,16,17
	06	S673		----------	NSW0312-001X	TACT SWITCH	(Addition)	1	01,02,03,04,05,06,07,08,09,0A,0B,0C, 0D,0E,0F,10,11,12,13,14,15,16,17
	06	S674		----------	NSW0312-001X	TACT SWITCH	(Addition)	1	01,02,03,04,05,06,07,08,09,0A,0B,0C, 0D,0E,0F,10,11,12,13,14,15,16,17
	06	S675		----------	NSW0312-001X	TACT SWITCH	(Addition)	1	01,02,03,04,05,06,07,08,09,0A,0B,0C, 0D,0E,0F,10,11,12,13,14,15,16,17
	06	S676		----------	NSW0312-001X	TACT SWITCH	(Addition)	1	01,02,03,04,05,06,07,08,09,0A,0B,0C, 0D,0E,0F,10,11,12,13,14,15,16,17
	06	S677		----------	NSW0312-001X	TACT SWITCH	(Addition)	1	01,02,03,04,05,06,07,08,09,0A,0B,0C, 0D,0E,0F,10,11,12,13,14,15,16,17
	06	S678		----------	NSW0312-001X	TACT SWITCH	(Addition)	1	01,02,03,04,05,06,07,08,09,0A,0B,0C, 0D,0E,0F,10,11,12,13,14,15,16,17
	06	S679		----------	NSW0312-001X	TACT SWITCH	(Addition)	1	01,02,03,04,05,06,07,08,09,0A,0B,0C, 0D,0E,0F,10,11,12,13,14,15,16,17
	06	S8501		----------	NSW0225-001X	DETECT SWITCH	(Addition)	1	01,02,03,04,05,06,07,08,09,0A,0B,0C, 0D,0E,0F,10,11,12,13,14,15,16,17
	06	S8502		----------	NSW0126-001X	DETECT SWITCH	(Addition)	1	01,02,03,04,05,06,07,08,09,0A,0B,0C, 0D,0E,0F,10,11,12,13,14,15,16,17
	06	X601		----------	NAX0974-001X	CRYSTAL	(Addition)	1	01,02,03,04,05,06,07,08,09,0A,0B,0C, 0D,0E,0F,10,11,12,13,14,15,16,17
	06	X6001		----------	NAX0971-001X	CRYSTAL	(Addition)	1	01,02,03,04,05,06,07,08,09,0A,0B,0C, 0D,0E,0F,10,11,12,13,14,15,16,17
	06	X6002		----------	NAX0970-001X	CRYSTAL	(Addition)	1	01,02,03,04,05,06,07,08,09,0A,0B,0C, 0D,0E,0F,10,11,12,13,14,15,16,17

Victor Company of Japan, Limited
Mobile Entertainment Division 10-1,1chome,Ohwatari-machi,Maebashi-city,371-8543,Japan

(MA443-R002)

Printed in Japan
VSE

JVC

REVISION INFORMATION

DVD RECEIVER WITH MONITOR

KW-ADV792J, KW-AVX624UI, KW-AVX625U, KW-AVX625UT, KW-AVX625EU, KW-AVX626U, KW-AVX626UT, KW-AVX626EU, KW-AVX626A, KW-AVX720J, KW-AVX720E, KW-AVX720EE, KW-AVX724UI, KW-AVX725U, KW-AVX725UN, KW-AVX725UT, KW-AVX725EU, KW-AVX726U, KW-AVX726UN, KW-AVX726UT, KW-AVX726EU, KW-AVX726A, KW-AVX728UF, KW-AVX722TU

■ OVERVIEW

Add KW-AVX722TU and DVD mechanism change for cost down.

■ DETAILS

COVER SECTION

Title	Line	No.MA443<Rev.002>	No.MA443<Rev.003>	Description
Revision		Rev.002	Rev.003	
Issue Date		2009/09	2009/12	
Model No.		KW-ADV792J, KW-AVX624UI, KW-AVX625EU, KW-AVX625U, KW-AVX625UT, KW-AVX626A, KW-AVX626EU, KW-AVX626U, KW-AVX626UT, KW-AVX720E, KW-AVX720EE, KW-AVX720J, KW-AVX724UI, KW-AVX725EU, KW-AVX725U, KW-AVX725UN, KW-AVX725UT, KW-AVX726A, KW-AVX726EU, KW-AVX726U, KW-AVX726UN, KW-AVX726UT, KW-AVX728UF	KW-ADV792J, KW-AVX624UI, KW-AVX625EU, KW-AVX625U, KW-AVX625UT, KW-AVX626A, KW-AVX626EU, KW-AVX626U, KW-AVX626UT, KW-AVX720E, KW-AVX720EE, KW-AVX720J, KW-AVX722TU, KW-AVX724UI, KW-AVX725EU, KW-AVX725U, KW-AVX725UN, KW-AVX725UT, KW-AVX726A, KW-AVX726EU, KW-AVX726U, KW-AVX726UN, KW-AVX726UT, KW-AVX728UF	

SECTION 2 SPECIFIC SERVICE INSTRUCTIONS

Title	Line	No.MA443<Rev.002>	No.MA443<Rev.003>	Description
2.1 Identification method	2	ILLUSTRATION(ma443_2001.png)	ILLUSTRATION(ma443_2001.png)	XML Structure

COPYRIGHT © 2009 Victor Company of Japan, Limited

STANDARD SCHEMATIC DIAGRAMS

Schematic Diagram

Diagram Name	No.MA443<Rev.002>	No.MA443<Rev.003>	Description
Menu	Front end section (For KW-ADV792, KW-AVX720, KW-AVX724, KW-AVX725, KW-AVX726, KW-AVX728)	Old Front end section (For KW-ADV792, KW-AVX720, KW-AVX724, KW-AVX725, KW-AVX726, KW-AVX728)	
Menu	Front end section (For KW-AVX624, KW-AVX625, KW-AVX626)	Old Front end section (For KW-AVX624, KW-AVX625, KW-AVX626)	
Menu	-	Front end section (For KW-ADV792, KW-AVX720, KW-AVX724, KW-AVX725, KW-AVX726, KW-AVX728,KW-AVX722T) ma443_s015.svgz	
Menu	-	Front end section (For KW-AVX624, KW-AVX625, KW-AVX626) ma443_s017.svgz	

Printed Circuit Board

Diagram Name	No.MA443<Rev.002>	No.MA443<Rev.003>	Description
Menu	Front end board (For KW-ADV792, KW-AVX720, KW-AVX724, KW-AVX725, KW-AVX726, KW-AVX728)	Old Front end board (For KW-ADV792, KW-AVX720, KW-AVX724, KW-AVX725, KW-AVX726, KW-AVX728)	
Menu	Photo board (For KW-ADV792, KW-AVX720, KW-AVX724, KW-AVX725, KW-AVX726, KW-AVX728)	Old Photo board (For KW-ADV792, KW-AVX720, KW-AVX724, KW-AVX725, KW-AVX726, KW-AVX728)	
Menu	Front end board (For KW-AVX624, KW-AVX625, KW-AVX626)	Old Front end board (For KW-AVX624, KW-AVX625, KW-AVX626)	
Menu	Photo board (For KW-AVX624, KW-AVX625, KW-AVX626)	Old Photo board (For KW-AVX624, KW-AVX625, KW-AVX626)	
Menu	-	Front end board (For KW-ADV792, KW-AVX720, KW-AVX724, KW-AVX725, KW-AVX726, KW-AVX728,KW-AVX722T) ma443_p015.svgz	
Menu	-	Photo board (For KW-ADV792, KW-AVX720, KW-AVX724, KW-AVX725, KW-AVX726, KW-AVX728,KW-AVX722T) ma443_p016.svgz	
Menu	-	Front end board (For KW-AVX624, KW-AVX625, KW-AVX626) ma443_p017.svgz	
Menu	-	Photo board (For KW-AVX624, KW-AVX625, KW-AVX626) ma443_p018.svgz	

Exploded View

Diagram Name	No.MA443<Rev.002>	No.MA443<Rev.003>	Description
Menu	-	DVD mechanism assembly(ADV792,AVX720,724,725,726,728,722T) ma443_m501.svgz	
Menu	-	DVD mechanism assembly(AVX624,625,626) ma443_m601.svgz	
Menu	DVD mechanism assembly(Except AVX624/625/626)	Old DVD mechanism assembly(Old ADV792,AVX720,724,725,726,728)	
Menu	DVD mechanism assembly(AVX624/625/626)	Old DVD mechanism assembly(Old AVX624,625,626)	

Description of Major ICs

Diagram Name	No.MA443<Rev.002>	No.MA443<Rev.003>	Description
Menu	-	IC721: JES195B JES195B.xml	
Menu	IC665: VDG1368-D011AWS	IC665: FSDG3101D023SCS	
Menu	-	IC399: V54C3128164VCI7 V54C3128164VCI7.xml	

PARTS LIST

MODEL No. LIST

Model No.	No.MA443<Rev.003>
KW-ADV792J	01
KW-AVX624UI	02
KW-AVX625EU	05
KW-AVX625U	03
KW-AVX625UT	04
KW-AVX626A	09
KW-AVX626EU	08
KW-AVX626U	06

Model No.	No.MA443<Rev.003>
KW-AVX626UT	07
KW-AVX720E	0B
KW-AVX720EE	0C
KW-AVX720J	0A
KW-AVX722TU	18
KW-AVX724UI	0D
KW-AVX725EU	11
KW-AVX725U	0E

Model No.	No.MA443<Rev.003>
KW-AVX725UN	0F
KW-AVX725UT	10
KW-AVX726A	16
KW-AVX726EU	15
KW-AVX726U	12
KW-AVX726UN	13
KW-AVX726UT	14
KW-AVX728UF	17

General assembly [M1MM]

⚠	Symbol		or	Part No. <Rev.002>	Part No. <Rev.003>	Part Name	Description	Qty	Models
	M1MM	48		----------	GE40466-007A	SPACER	(Addition)	1	18
	M1MM	49		----------	GE33999-001A	FR CHASSIS ASSY	(Addition)	1	18
	M1MM	78		----------	GE10261-012A	FRONT PANEL	(Addition)	1	18
	M1MM	80		----------	GE33538-005A	JVC BADGE BASE	(Addition)	1	18
	M1MM	86		----------	GE20255-005A	BUTTON BASE L	(Addition)	1	18
	M1MM	87		----------	GE20256-011A	BUTTON BASE R	(Addition)	1	18
	M1MM	94		----------	GE33549-002A	PANEL BKT ASSY	(Addition)	1	18
	M1MM	109		----------	GE34033-001A	NAME PLATE	(Addition)	1	18
	M1MM	113		----------	QAL1252-001	TOUCH PANEL	(Addition)	1	18
	M1MM	121		----------	QAM1274-001	CAR CABLE	(Addition)	1	18
	M1MM	129		----------	VYTA500-001	PIN CAP	(Addition)	2	18
	M1MM	130		----------	QAM1167-001	CAR CABLE	(Addition)	1	18
	M1MM	139		----------	LV45408-001A	LABEL(M2/R2)	(Addition)	1	01,02,03,04,05,06,07,08,09,0A,0B,0C,0D,0E,0F,10,11,12,13,14,15,16,17

FMU-XD4-12D DVD mechanism ADV792,AVX720,724,725,726,728,722 [M5MM]

⚠	Symbol		or	Part No. <Rev.002>	Part No. <Rev.003>	Part Name	Description	Qty	Models
	M5MM	1		----------	LV11434-009A	FRAME UNIT	(Addition)	1	01,0A,0B,0C,0D,0E,0F,10,11,12,13,14,15,16,17,18
	M5MM	2		----------	LV45021-001A	STOPPER	(Addition)	1	01,0A,0B,0C,0D,0E,0F,10,11,12,13,14,15,16,17,18
	M5MM	3		----------	LV44959-002A	SPECIAL SCREW	(Addition)	1	01,0A,0B,0C,0D,0E,0F,10,11,12,13,14,15,16,17,18
	M5MM	4		----------	LV45249-002A	L A SPRING(R) 2	(Addition)	1	01,0A,0B,0C,0D,0E,0F,10,11,12,13,14,15,16,17,18
	M5MM	5		----------	LV37639-002A	L ARM HOLDER	(Addition)	1	01,0A,0B,0C,0D,0E,0F,10,11,12,13,14,15,16,17,18
	M5MM	6		----------	VKZ4539-054	MINI SCREW	(Addition)	2	01,0A,0B,0C,0D,0E,0F,10,11,12,13,14,15,16,17,18
	M5MM	7		----------	LV37640-001A	DAMPER(R)	(Addition)	1	01,0A,0B,0C,0D,0E,0F,10,11,12,13,14,15,16,17,18
	M5MM	8		----------	LV37641-001A	DAMPER(F)	(Addition)	2	01,0A,0B,0C,0D,0E,0F,10,11,12,13,14,15,16,17,18
	M5MM	9		----------	LV45074-001A	DAMPER SPRING B	(Addition)	2	01,0A,0B,0C,0D,0E,0F,10,11,12,13,14,15,16,17,18
	M5MM	10		----------	LV45073-001A	DAMPER SPRING A	(Addition)	1	01,0A,0B,0C,0D,0E,0F,10,11,12,13,14,15,16,17,18
	M5MM	11		----------	LV44897-002A	FLOATING SPRING	(Addition)	1	01,0A,0B,0C,0D,0E,0F,10,11,12,13,14,15,16,17,18

⚠	Symbol		or	Part No. <Rev.002>	Part No. <Rev.003>	Part Name	Description	Qty	Models
	M5MM	12		----------	LV44894-001A	LOCK SLIDER SPR	(Addition)	1	01,0A,0B,0C,0D,0E,0F,10,11,12,13,14,15,16,17,18
	M5MM	13		----------	LV11436-001A	MOTOR HOLDER	(Addition)	1	01,0A,0B,0C,0D,0E,0F,10,11,12,13,14,15,16,17,18
	M5MM	14		----------	LV45135-001A	MINI TAP SCREW	(Addition)	2	01,0A,0B,0C,0D,0E,0F,10,11,12,13,14,15,16,17,18
	M5MM	15		----------	QAR0465-001	LOADING MOTOR	(Addition)	1	01,0A,0B,0C,0D,0E,0F,10,11,12,13,14,15,16,17,18
	M5MM	16		----------	QYSPSPU1425MA	SCREW	(Addition)	2	01,0A,0B,0C,0D,0E,0F,10,11,12,13,14,15,16,17,18
	M5MM	17		----------	LV37642-001A	MOTOR TH SPRING	(Addition)	1	01,0A,0B,0C,0D,0E,0F,10,11,12,13,14,15,16,17,18
	M5MM	18		----------	LV37643-001A	MOTOR WORM	(Addition)	1	01,0A,0B,0C,0D,0E,0F,10,11,12,13,14,15,16,17,18
	M5MM	19		----------	LV37644-002A	M WHEEL GEAR	(Addition)	1	01,0A,0B,0C,0D,0E,0F,10,11,12,13,14,15,16,17,18
	M5MM	20		----------	LV37645-002A	M CONNECT GEAR	(Addition)	1	01,0A,0B,0C,0D,0E,0F,10,11,12,13,14,15,16,17,18
	M5MM	21		----------	LV37646-001A	A WORM GEAR	(Addition)	1	01,0A,0B,0C,0D,0E,0F,10,11,12,13,14,15,16,17,18
	M5MM	22		----------	LV37647-001A	A WHEEL GEAR	(Addition)	1	01,0A,0B,0C,0D,0E,0F,10,11,12,13,14,15,16,17,18
	M5MM	23		----------	LV37648-001A	ACT GEAR	(Addition)	1	01,0A,0B,0C,0D,0E,0F,10,11,12,13,14,15,16,17,18
	M5MM	24		----------	LV37649-001A	A CONNECT GAER	(Addition)	1	01,0A,0B,0C,0D,0E,0F,10,11,12,13,14,15,16,17,18
	M5MM	25		----------	LV37650-001A	LOAD GAER	(Addition)	1	01,0A,0B,0C,0D,0E,0F,10,11,12,13,14,15,16,17,18
	M5MM	26		----------	LV22553-003A	GEAR BASE	(Addition)	1	01,0A,0B,0C,0D,0E,0F,10,11,12,13,14,15,16,17,18
	M5MM	27		----------	VKZ4539-054	MINI SCREW	(Addition)	2	01,0A,0B,0C,0D,0E,0F,10,11,12,13,14,15,16,17,18
	M5MM	28		----------	LV37688-002A	SLIDE CAM ASSY	(Addition)	1	01,0A,0B,0C,0D,0E,0F,10,11,12,13,14,15,16,17,18
	M5MM	29		----------	LV45090-001A	S.CAM SPRING	(Addition)	1	01,0A,0B,0C,0D,0E,0F,10,11,12,13,14,15,16,17,18
	M5MM	30		----------	LV11437-003A	TOP COVER	(Addition)	1	01,0A,0B,0C,0D,0E,0F,10,11,12,13,14,15,16,17,18
	M5MM	31		----------	LV45157-001A	SPACER	(Addition)	1	01,0A,0B,0C,0D,0E,0F,10,11,12,13,14,15,16,17,18
	M5MM	32		----------	LV11600-001A	DISC PLATE 2	(Addition)	1	01,0A,0B,0C,0D,0E,0F,10,11,12,13,14,15,16,17,18
	M5MM	33		----------	WJM0515-001A-E	E-SI C WIRE C-F	(Addition)	1	01,0A,0B,0C,0D,0E,0F,10,11,12,13,14,15,16,17,18
	M5MM	34		----------	LV44586-001A	SPECIAL SCREW	(Addition)	1	01,0A,0B,0C,0D,0E,0F,10,11,12,13,14,15,16,17,18
	M5MM	35		----------	LV22735-001A	LOADING A AS 2	(Addition)	1	01,0A,0B,0C,0D,0E,0F,10,11,12,13,14,15,16,17,18
	M5MM	36		----------	LV44902-002A	ROLLER	(Addition)	2	01,0A,0B,0C,0D,0E,0F,10,11,12,13,14,15,16,17,18
	M5MM	37		----------	LV45244-001A	ROLLER SHAFT 2	(Addition)	1	01,0A,0B,0C,0D,0E,0F,10,11,12,13,14,15,16,17,18
	M5MM	38		----------	LV37652-002A	SHAFT GUIDE	(Addition)	1	01,0A,0B,0C,0D,0E,0F,10,11,12,13,14,15,16,17,18
	M5MM	39		----------	LV45252-001A	WASHER	(Addition)	2	01,0A,0B,0C,0D,0E,0F,10,11,12,13,14,15,16,17,18
	M5MM	40		----------	LV44960-001A	SLIT WASHER	(Addition)	2	01,0A,0B,0C,0D,0E,0F,10,11,12,13,14,15,16,17,18
	M5MM	41		----------	LV44904-001A	ROLLER COLLAR L	(Addition)	1	01,0A,0B,0C,0D,0E,0F,10,11,12,13,14,15,16,17,18
	M5MM	42		----------	LV45221-001A	R. COLLAR R2	(Addition)	1	01,0A,0B,0C,0D,0E,0F,10,11,12,13,14,15,16,17,18
	M5MM	43		----------	LV45235-001A	L ARM ROD	(Addition)	1	01,0A,0B,0C,0D,0E,0F,10,11,12,13,14,15,16,17,18
	M5MM	44		----------	LV37653-001A	CONNECT GEAR	(Addition)	1	01,0A,0B,0C,0D,0E,0F,10,11,12,13,14,15,16,17,18
	M5MM	45		----------	LV37654-001A	MIDDLE GEAR	(Addition)	1	01,0A,0B,0C,0D,0E,0F,10,11,12,13,14,15,16,17,18
	M5MM	46		----------	QYWDL1735250	SLIT WASHER	(Addition)	1	01,0A,0B,0C,0D,0E,0F,10,11,12,13,14,15,16,17,18
	M5MM	47		----------	LV37655-001A	ROLLER GAER	(Addition)	1	01,0A,0B,0C,0D,0E,0F,10,11,12,13,14,15,16,17,18
	M5MM	48		----------	LV45248-001A	L A SPRING(L) 2	(Addition)	1	01,0A,0B,0C,0D,0E,0F,10,11,12,13,14,15,16,17,18

⚠	Symbol		or	Part No. <Rev.002>	Part No. <Rev.003>	Part Name	Description	Qty	Models
	M5MM	49		----------	VKZ4539-054	MINI SCREW	(Addition)	5	01,0A,0B,0C,0D,0E,0F,10,11,12,13,14,15,16,17,18
	M5MM	50		----------	CM-FMUXD3D	TRA MECHA UNIT	(Addition)	1	01,0A,0B,0C,0D,0E,0F,10,11,12,13,14,15,16,17,18
	M5MM	51		----------	LV44910-002A	CLAMPER SPRING	(Addition)	1	01,0A,0B,0C,0D,0E,0F,10,11,12,13,14,15,16,17,18
	M5MM	52		----------	LV45289-002A	SPACER(P)	(Addition)	1	01,0A,0B,0C,0D,0E,0F,10,11,12,13,14,15,16,17,18
	M5MM	53		----------	VKZ4539-054	MINI SCREW	(Addition)	2	01,0A,0B,0C,0D,0E,0F,10,11,12,13,14,15,16,17,18

FMU-XD3-12D DVD mechanism AVX624, 625, 626 [M6MM]

⚠	Symbol		or	Part No. <Rev.002>	Part No. <Rev.003>	Part Name	Description	Qty	Models
	M6MM	1		----------	LV11434-008A	FRAME UNIT	(Addition)	1	02,03,04,05,06,07,08,09
	M6MM	2		----------	LV45021-001A	STOPPER	(Addition)	1	02,03,04,05,06,07,08,09
	M6MM	3		----------	LV44959-002A	SPECIAL SCREW	(Addition)	1	02,03,04,05,06,07,08,09
	M6MM	4		----------	LV45249-002A	L A SPRING(R) 2	(Addition)	1	02,03,04,05,06,07,08,09
	M6MM	5		----------	LV37639-002A	L ARM HOLDER	(Addition)	1	02,03,04,05,06,07,08,09
	M6MM	6		----------	VKZ4539-054	MINI SCREW	(Addition)	2	02,03,04,05,06,07,08,09
	M6MM	7		----------	LV37640-001A	DAMPER(R)	(Addition)	1	02,03,04,05,06,07,08,09
	M6MM	8		----------	LV37641-001A	DAMPER(F)	(Addition)	2	02,03,04,05,06,07,08,09
	M6MM	9		----------	LV45074-001A	DAMPER SPRING B	(Addition)	2	02,03,04,05,06,07,08,09
	M6MM	10		----------	LV45073-001A	DAMPER SPRING A	(Addition)	1	02,03,04,05,06,07,08,09
	M6MM	11		----------	LV44897-002A	FLOATING SPRING	(Addition)	1	02,03,04,05,06,07,08,09
	M6MM	12		----------	LV44894-001A	LOCK SLIDER SPR	(Addition)	1	02,03,04,05,06,07,08,09
	M6MM	13		----------	LV11436-001A	MOTOR HOLDER	(Addition)	1	02,03,04,05,06,07,08,09
	M6MM	14		----------	LV45135-001A	MINI TAP SCREW	(Addition)	2	02,03,04,05,06,07,08,09
	M6MM	15		----------	QAR0465-001	LOADING MOTOR	(Addition)	1	02,03,04,05,06,07,08,09
	M6MM	16		----------	QYSPSPU1425MA	SCREW	(Addition)	2	02,03,04,05,06,07,08,09
	M6MM	17		----------	LV37642-001A	MOTOR TH SPRING	(Addition)	1	02,03,04,05,06,07,08,09
	M6MM	18		----------	LV37643-001A	MOTOR WORM	(Addition)	1	02,03,04,05,06,07,08,09
	M6MM	19		----------	LV37644-002A	M WHEEL GEAR	(Addition)	1	02,03,04,05,06,07,08,09
	M6MM	20		----------	LV37645-002A	M CONNECT GEAR	(Addition)	1	02,03,04,05,06,07,08,09
	M6MM	21		----------	LV37646-001A	A WORM GEAR	(Addition)	1	02,03,04,05,06,07,08,09
	M6MM	22		----------	LV37647-001A	A WHEEL GEAR	(Addition)	1	02,03,04,05,06,07,08,09
	M6MM	23		----------	LV37648-001A	ACT GEAR	(Addition)	1	02,03,04,05,06,07,08,09
	M6MM	24		----------	LV37649-001A	A CONNECT GAER	(Addition)	1	02,03,04,05,06,07,08,09
	M6MM	25		----------	LV37650-001A	LOAD GAER	(Addition)	1	02,03,04,05,06,07,08,09
	M6MM	26		----------	LV22553-003A	GEAR BASE	(Addition)	1	02,03,04,05,06,07,08,09
	M6MM	27		----------	VKZ4539-054	MINI SCREW	(Addition)	2	02,03,04,05,06,07,08,09
	M6MM	28		----------	LV37688-002A	SLIDE CAM ASSY	(Addition)	1	02,03,04,05,06,07,08,09
	M6MM	29		----------	LV45090-001A	S.CAM SPRING	(Addition)	1	02,03,04,05,06,07,08,09
	M6MM	30		----------	LV11437-003A	TOP COVER	(Addition)	1	02,03,04,05,06,07,08,09
	M6MM	31		----------	LV45157-001A	SPACER	(Addition)	1	02,03,04,05,06,07,08,09
	M6MM	32		----------	LV11600-001A	DISC PLATE 2	(Addition)	1	02,03,04,05,06,07,08,09
	M6MM	33		----------	WJM0515-001A-E	E-SI C WIRE C-F	(Addition)	1	02,03,04,05,06,07,08,09
	M6MM	34		----------	LV44586-001A	SPECIAL SCREW	(Addition)	1	02,03,04,05,06,07,08,09
	M6MM	35		----------	LV22735-001A	LOADING A AS 2	(Addition)	1	02,03,04,05,06,07,08,09
	M6MM	36		----------	LV44902-002A	ROLLER	(Addition)	2	02,03,04,05,06,07,08,09
	M6MM	37		----------	LV45244-001A	ROLLER SHAFT 2	(Addition)	1	02,03,04,05,06,07,08,09
	M6MM	38		----------	LV37652-002A	SHAFT GUIDE	(Addition)	1	02,03,04,05,06,07,08,09
	M6MM	39		----------	LV45252-001A	WASHER	(Addition)	2	02,03,04,05,06,07,08,09
	M6MM	40		----------	LV44960-001A	SLIT WASHER	(Addition)	2	02,03,04,05,06,07,08,09
	M6MM	41		----------	LV44904-001A	ROLLER COLLAR L	(Addition)	1	02,03,04,05,06,07,08,09
	M6MM	42		----------	LV45221-001A	R. COLLAR R2	(Addition)	1	02,03,04,05,06,07,08,09
	M6MM	43		----------	LV45235-001A	L ARM ROD	(Addition)	1	02,03,04,05,06,07,08,09
	M6MM	44		----------	LV37653-001A	CONNECT GEAR	(Addition)	1	02,03,04,05,06,07,08,09
	M6MM	45		----------	LV37654-001A	MIDDLE GEAR	(Addition)	1	02,03,04,05,06,07,08,09
	M6MM	46		----------	QYWDL1735250	SLIT WASHER	(Addition)	1	02,03,04,05,06,07,08,09
	M6MM	47		----------	LV37655-001A	ROLLER GAER	(Addition)	1	02,03,04,05,06,07,08,09
	M6MM	48		----------	LV45248-001A	L A SPRING(L) 2	(Addition)	1	02,03,04,05,06,07,08,09
	M6MM	49		----------	VKZ4539-054	MINI SCREW	(Addition)	5	02,03,04,05,06,07,08,09
	M6MM	50		----------	CM-FMUXD3D	TRA MECHA UNIT	(Addition)	1	02,03,04,05,06,07,08,09
	M6MM	51		----------	LV44910-002A	CLAMPER SPRING	(Addition)	1	02,03,04,05,06,07,08,09
	M6MM	52		----------	LV45289-002A	SPACER(P)	(Addition)	1	02,03,04,05,06,07,08,09
	M6MM	53		----------	VKZ4539-054	MINI SCREW	(Addition)	2	02,03,04,05,06,07,08,09

Electrical parts list Old Main board Except AVX722T [01]

⚠	Symbol		or	Part No. <Rev.002>	Part No. <Rev.003>	Part Name	Description	Qty	Models
⚠	01	D901	or	1N5401-TU-15	1N5401-TU-15	SI DIODE		1	01,02,03,04,05,06,07,08,09,0A,0B,0C,0D,0E,0F,10,11,12,13,14,15,16,17

Main board [05]

⚠	Symbol		or	Part No. <Rev.002>	Part No. <Rev.003>	Part Name	Description	Qty	Models
	05	IC204		----------	NJM2505F-X	IC	(Addition)	1	18
⚠	05	IC721		----------	JES195B	IC(PROGRAMED)	(Addition)	1	18
	05	Q926		----------	RSQ035P03-W	MOS FET	(Addition)	1	18
	05	Q927		----------	RSQ035P03-W	MOS FET	(Addition)	1	18
	05	D201		----------	1SS355W-X	DIODE	(Addition)	1	18
	05	D201	or	----------	MA111-X	SI DIODE	(Addition)	1	18
	05	D202		----------	1SS355W-X	DIODE	(Addition)	1	18
	05	D202	or	----------	MA111-X	SI DIODE	(Addition)	1	18
	05	D501		----------	MA8047/M/-X	Z DIODE	(Addition)	1	18
	05	D501	or	----------	UDZW4.7B-X	Z DIODE	(Addition)	1	18
⚠	05	D901	or	1N5401-TU-15	1N5401-TU-15	SI DIODE		1	01,02,03,04,05,06,07,08,09,0A,0B,0C,0D,0E,0F,10,11,12,13,14,15,16,17,18
	05	C216		----------	QETN1HM-106Z	E CAPACITOR	(Addition)	1	18
	05	C217		----------	QETN1HM-106Z	E CAPACITOR	(Addition)	1	18
	05	C218		----------	NCB31EK-104X	C CAPACITOR	(Addition)	1	18
	05	C219		----------	QETN1EM-476Z	E CAPACITOR	(Addition)	1	18
	05	C225		----------	NCB31HK-102X	C CAPACITOR	(Addition)	1	18
	05	C240		----------	NCB21CK-105X	C CAPACITOR	(Addition)	1	18
	05	C314		----------	NCB21AK-225X-A	C CAPACITOR	(Addition)	1	18
	05	C411		----------	NCJ11EK-106X-R	C CAPACITOR	(Addition)	1	18
	05	R213		----------	NRSA6AJ-471W	MG RESISTOR	(Addition)	1	18
	05	R214		----------	NRSA6AJ-471W	MG RESISTOR	(Addition)	1	18
	05	R215		----------	NRSA6AJ-104W	MG RESISTOR	(Addition)	1	18
	05	R216		----------	NRSA6AJ-104W	MG RESISTOR	(Addition)	1	18
	05	R222		----------	NRSA63J-390X	MG RESISTOR	(Addition)	1	18
	05	R224		----------	NRSA6AJ-100W	MG RESISTOR	(Addition)	1	18
	05	R501		----------	NRSA6AJ-271W	MG RESISTOR	(Addition)	1	18
	05	R502		----------	NRSA6AJ-0R0W	MG RESISTOR	(Addition)	1	18
	05	RA201		----------	NRZ0065-301X	NET RESISTOR	(Addition)	1	18
	05	L205		----------	NRSA02J-0R0X	MG RESISTOR	(Addition)	1	18
	05	CN702		----------	QGA2501C1-05	CONNECTOR	(Addition)	1	18
	05	CN703		----------	QGA2501C1-04	CONNECTOR	(Addition)	1	18
	05	CN705		----------	QGA1002C1-06X	CONNECTOR	(Addition)	1	18
⚠	05	F901		----------	NMFZ018-3R0X-E	FUSE	(Addition)	1	18
⚠	05	F903		NMFZ018-3R0X-E	NMFZ018-3R0X-E	FUSE		1	01,02,03,04,05,06,07,08,09,0A,0B,0C,0D,0E,0F,10,11,12,13,14,15,16,17,18
⚠	05	F1901		NMFZ018-2R5X-E	NMFZ018-2R5X-E	FUSE		1	01,02,03,04,05,06,07,08,09,0A,0B,0C,0D,0E,0F,10,11,12,13,14,15,16,17,18

Panel board [06]

⚠	Symbol		or	Part No. <Rev.002>	Part No. <Rev.003>	Part Name	Description	Qty	Models
	06	R6831		----------	NRSA6AJ-104W	MG RESISTOR	(Addition)	1	18
	06	R6835		----------	NRSA63J-104X	MG RESISTOR	(Addition)	1	18
	06	CN604		----------	QGF0522F3-15W	CONNECTOR	(Addition)	1	18
	06	CN605		----------	QGF0522F3-09W	CONNECTOR	(Addition)	1	18

FMU-XD4-12D Front end board ADV792,AVX720,724,725,726,728,722T [07]

⚠	Symbol		or	Part No. <Rev.002>	Part No. <Rev.003>	Part Name	Description	Qty	Models
	07	IC1		----------	BD8215EFV-X	IC	(Addition)	1	01,0A,0B,0C,0D,0E,0F,10,11,12,13,14,15,16,17,18
	07	IC3		----------	MM3233CF-X	IC	(Addition)	1	01,0A,0B,0C,0D,0E,0F,10,11,12,13,14,15,16,17,18
	07	IC7		----------	TC7PA53FU-X	IC	(Addition)	1	01,0A,0B,0C,0D,0E,0F,10,11,12,13,14,15,16,17,18
	07	IC8		----------	MFI341S2162-X	IC	(Addition)	1	01,0A,0B,0C,0D,0E,0F,10,11,12,13,14,15,16,17,18
	07	IC301		----------	MN2DS0018MA	IC	(Addition)	1	01,0A,0B,0C,0D,0E,0F,10,11,12,13,14,15,16,17,18
	07	IC302		----------	MM1701CH-X	IC	(Addition)	1	01,0A,0B,0C,0D,0E,0F,10,11,12,13,14,15,16,17,18
	07	IC308		----------	NJU6368PF1-X	IC	(Addition)	1	01,0A,0B,0C,0D,0E,0F,10,11,12,13,14,15,16,17,18
	07	IC398		----------	JVM441B	IC	(Addition)	1	01,0A,0B,0C,0D,0E,0F,10,11,12,13,14,15,16,17,18
	07	IC399		----------	V54C3128164VCI7	IC	(Addition)	1	01,0A,0B,0C,0D,0E,0F,10,11,12,13,14,15,16,17,18
	07	IC399	or	----------	HY57V281620FTH	IC(DIGITAL)	(Addition)	1	01,0A,0B,0C,0D,0E,0F,10,11,12,13,14,15,16,17,18
	07	IC400		----------	AK4387ET-X	IC	(Addition)	1	01,0A,0B,0C,0D,0E,0F,10,11,12,13,14,15,16,17,18
	07	IC481		----------	BR24S32FVT-W-X	IC(DIGITAL)	(Addition)	1	01,0A,0B,0C,0D,0E,0F,10,11,12,13,14,15,16,17,18
	07	IC501		----------	TC74LCX373FT-X	IC(DIGITAL)	(Addition)	1	01,0A,0B,0C,0D,0E,0F,10,11,12,13,14,15,16,17,18
	07	IC502		----------	TC74LCX373FT-X	IC(DIGITAL)	(Addition)	1	01,0A,0B,0C,0D,0E,0F,10,11,12,13,14,15,16,17,18
	07	Q2		----------	RT1N141U-X	DIGI TRANSISTOR	(Addition)	1	01,0A,0B,0C,0D,0E,0F,10,11,12,13,14,15,16,17,18
	07	Q4		----------	2SD601A/R/-X	TRANSISTOR	(Addition)	1	01,0A,0B,0C,0D,0E,0F,10,11,12,13,14,15,16,17,18
	07	Q4	or	----------	2SC3928A/R/-X	TRANSISTOR	(Addition)	1	01,0A,0B,0C,0D,0E,0F,10,11,12,13,14,15,16,17,18
	07	Q7		----------	2SD601A/R/-X	TRANSISTOR	(Addition)	1	01,0A,0B,0C,0D,0E,0F,10,11,12,13,14,15,16,17,18
	07	Q7	or	----------	2SC3928A/R/-X	TRANSISTOR	(Addition)	1	01,0A,0B,0C,0D,0E,0F,10,11,12,13,14,15,16,17,18
	07	Q101		----------	2SB1424/R/-W	TRANSISTOR	(Addition)	1	01,0A,0B,0C,0D,0E,0F,10,11,12,13,14,15,16,17,18
	07	Q102		----------	2SC4617/R/-X	TRANSISTOR	(Addition)	1	01,0A,0B,0C,0D,0E,0F,10,11,12,13,14,15,16,17,18
	07	Q103		----------	2SB1424/R/-W	TRANSISTOR	(Addition)	1	01,0A,0B,0C,0D,0E,0F,10,11,12,13,14,15,16,17,18
	07	Q104		----------	2SC4617/R/-X	TRANSISTOR	(Addition)	1	01,0A,0B,0C,0D,0E,0F,10,11,12,13,14,15,16,17,18
	07	Q105		----------	2SC4617/R/-X	TRANSISTOR	(Addition)	1	01,0A,0B,0C,0D,0E,0F,10,11,12,13,14,15,16,17,18
	07	Q106		----------	2SK3546J-X	MOS FET	(Addition)	1	01,0A,0B,0C,0D,0E,0F,10,11,12,13,14,15,16,17,18
	07	Q107		----------	2SK3546J-X	MOS FET	(Addition)	1	01,0A,0B,0C,0D,0E,0F,10,11,12,13,14,15,16,17,18
	07	Q301		----------	RT1N441U-X	DIGI TRANSISTOR	(Addition)	1	01,0A,0B,0C,0D,0E,0F,10,11,12,13,14,15,16,17,18
	07	Q302		----------	RT1N441U-X	DIGI TRANSISTOR	(Addition)	1	01,0A,0B,0C,0D,0E,0F,10,11,12,13,14,15,16,17,18
	07	D6		----------	AN1102W-6-X	IR LED	(Addition)	1	01,0A,0B,0C,0D,0E,0F,10,11,12,13,14,15,16,17,18
	07	D7		----------	AN1102W-6-X	IR LED	(Addition)	1	01,0A,0B,0C,0D,0E,0F,10,11,12,13,14,15,16,17,18
	07	D9		----------	PS1192HB-22-X	PHOTO TRANSISTOR	(Addition)	1	01,0A,0B,0C,0D,0E,0F,10,11,12,13,14,15,16,17,18
	07	D11		----------	PS1192HB-22-X	PHOTO TRANSISTOR	(Addition)	1	01,0A,0B,0C,0D,0E,0F,10,11,12,13,14,15,16,17,18
	07	C2		----------	NCB31CK-104X	C CAPACITOR	(Addition)	1	01,0A,0B,0C,0D,0E,0F,10,11,12,13,14,15,16,17,18
	07	C3		----------	NCB31CK-104X	C CAPACITOR	(Addition)	1	01,0A,0B,0C,0D,0E,0F,10,11,12,13,14,15,16,17,18
	07	C4		----------	NCB31CK-104X	C CAPACITOR	(Addition)	1	01,0A,0B,0C,0D,0E,0F,10,11,12,13,14,15,16,17,18
	07	C5		----------	NCB31CK-104X	C CAPACITOR	(Addition)	1	01,0A,0B,0C,0D,0E,0F,10,11,12,13,14,15,16,17,18
	07	C6		----------	NCB31CK-104X	C CAPACITOR	(Addition)	1	01,0A,0B,0C,0D,0E,0F,10,11,12,13,14,15,16,17,18
	07	C7		----------	NCB31CK-104X	C CAPACITOR	(Addition)	1	01,0A,0B,0C,0D,0E,0F,10,11,12,13,14,15,16,17,18
	07	C8		----------	NCB31CK-104X	C CAPACITOR	(Addition)	1	01,0A,0B,0C,0D,0E,0F,10,11,12,13,14,15,16,17,18
	07	C9		----------	NCB31CK-104X	C CAPACITOR	(Addition)	1	01,0A,0B,0C,0D,0E,0F,10,11,12,13,14,15,16,17,18
	07	C11		----------	NCB31CK-104X	C CAPACITOR	(Addition)	1	01,0A,0B,0C,0D,0E,0F,10,11,12,13,14,15,16,17,18
	07	C12		----------	NCB31CK-104X	C CAPACITOR	(Addition)	1	01,0A,0B,0C,0D,0E,0F,10,11,12,13,14,15,16,17,18
	07	C13		----------	NCB31CK-104X	C CAPACITOR	(Addition)	1	01,0A,0B,0C,0D,0E,0F,10,11,12,13,14,15,16,17,18
	07	C14		----------	NCB31CK-104X	C CAPACITOR	(Addition)	1	01,0A,0B,0C,0D,0E,0F,10,11,12,13,14,15,16,17,18
	07	C15		----------	NCB31CK-104X	C CAPACITOR	(Addition)	1	01,0A,0B,0C,0D,0E,0F,10,11,12,13,14,15,16,17,18
	07	C16		----------	NCB31CK-104X	C CAPACITOR	(Addition)	1	01,0A,0B,0C,0D,0E,0F,10,11,12,13,14,15,16,17,18
	07	C17		----------	NCB31CK-104X	C CAPACITOR	(Addition)	1	01,0A,0B,0C,0D,0E,0F,10,11,12,13,14,15,16,17,18
	07	C18		----------	NCB31CK-104X	C CAPACITOR	(Addition)	1	01,0A,0B,0C,0D,0E,0F,10,11,12,13,14,15,16,17,18
	07	C19		----------	NCB31CK-104X	C CAPACITOR	(Addition)	1	01,0A,0B,0C,0D,0E,0F,10,11,12,13,14,15,16,17,18
	07	C20		----------	NCB31CK-104X	C CAPACITOR	(Addition)	1	01,0A,0B,0C,0D,0E,0F,10,11,12,13,14,15,16,17,18
	07	C21		----------	NBE41AM-226X	TA E CAPACITOR	(Addition)	1	01,0A,0B,0C,0D,0E,0F,10,11,12,13,14,15,16,17,18
	07	C22		----------	NBE41AM-476X	TA E CAPACITOR	(Addition)	1	01,0A,0B,0C,0D,0E,0F,10,11,12,13,14,15,16,17,18
	07	C23		----------	NBE41AM-476X	TA E CAPACITOR	(Addition)	1	01,0A,0B,0C,0D,0E,0F,10,11,12,13,14,15,16,17,18
	07	C24		----------	NCB31CK-104X	C CAPACITOR	(Addition)	1	01,0A,0B,0C,0D,0E,0F,10,11,12,13,14,15,16,17,18
	07	C25		----------	NCB31CK-104X	C CAPACITOR	(Addition)	1	01,0A,0B,0C,0D,0E,0F,10,11,12,13,14,15,16,17,18
	07	C26		----------	NCB31CK-104X	C CAPACITOR	(Addition)	1	01,0A,0B,0C,0D,0E,0F,10,11,12,13,14,15,16,17,18
	07	C31		----------	NCB31HK-681X	C CAPACITOR	(Addition)	1	01,0A,0B,0C,0D,0E,0F,10,11,12,13,14,15,16,17,18
	07	C32		----------	NCB31HK-561X	C CAPACITOR	(Addition)	1	01,0A,0B,0C,0D,0E,0F,10,11,12,13,14,15,16,17,18
	07	C48		----------	NCB31CK-104X	C CAPACITOR	(Addition)	1	01,0A,0B,0C,0D,0E,0F,10,11,12,13,14,15,16,17,18
	07	C50		----------	NCB31CK-104X	C CAPACITOR	(Addition)	1	01,0A,0B,0C,0D,0E,0F,10,11,12,13,14,15,16,17,18
	07	C51		----------	NDC31HJ-4R0X	C CAPACITOR	(Addition)	1	01,0A,0B,0C,0D,0E,0F,10,11,12,13,14,15,16,17,18
	07	C52		----------	NDC31HJ-4R0X	C CAPACITOR	(Addition)	1	01,0A,0B,0C,0D,0E,0F,10,11,12,13,14,15,16,17,18
	07	C60		----------	NCB31HK-103X	C CAPACITOR	(Addition)	1	01,0A,0B,0C,0D,0E,0F,10,11,12,13,14,15,16,17,18

⚠	Symbol		or	Part No. <Rev.002>	Part No. <Rev.003>	Part Name	Description	Qty	Models
	07	C63		----------	NBE20JM-226X	TA E CAPACITOR	(Addition)	1	01,0A,0B,0C,0D,0E,0F,10,11,12,13,14,15,16,17,18
	07	C65		----------	NCB31CK-104X	C CAPACITOR	(Addition)	1	01,0A,0B,0C,0D,0E,0F,10,11,12,13,14,15,16,17,18
	07	C66		----------	NCB31CK-104X	C CAPACITOR	(Addition)	1	01,0A,0B,0C,0D,0E,0F,10,11,12,13,14,15,16,17,18
	07	C67		----------	NCB31HK-103X	C CAPACITOR	(Addition)	1	01,0A,0B,0C,0D,0E,0F,10,11,12,13,14,15,16,17,18
	07	C68		----------	NCB31CK-104X	C CAPACITOR	(Addition)	1	01,0A,0B,0C,0D,0E,0F,10,11,12,13,14,15,16,17,18
	07	C69		----------	NCB21CK-105X	C CAPACITOR	(Addition)	1	01,0A,0B,0C,0D,0E,0F,10,11,12,13,14,15,16,17,18
	07	C70		----------	NCB31CK-104X	C CAPACITOR	(Addition)	1	01,0A,0B,0C,0D,0E,0F,10,11,12,13,14,15,16,17,18
	07	C71		----------	NCB31CK-104X	C CAPACITOR	(Addition)	1	01,0A,0B,0C,0D,0E,0F,10,11,12,13,14,15,16,17,18
	07	C72		----------	NCB31CK-105X	C CAPACITOR	(Addition)	1	01,0A,0B,0C,0D,0E,0F,10,11,12,13,14,15,16,17,18
	07	C73		----------	NCB31CK-104X	C CAPACITOR	(Addition)	1	01,0A,0B,0C,0D,0E,0F,10,11,12,13,14,15,16,17,18
	07	C74		----------	NCB31CK-104X	C CAPACITOR	(Addition)	1	01,0A,0B,0C,0D,0E,0F,10,11,12,13,14,15,16,17,18
	07	C75		----------	NCB31CK-104X	C CAPACITOR	(Addition)	1	01,0A,0B,0C,0D,0E,0F,10,11,12,13,14,15,16,17,18
	07	C76		----------	NCB31CK-104X	C CAPACITOR	(Addition)	1	01,0A,0B,0C,0D,0E,0F,10,11,12,13,14,15,16,17,18
	07	C77		----------	NCB31CK-104X	C CAPACITOR	(Addition)	1	01,0A,0B,0C,0D,0E,0F,10,11,12,13,14,15,16,17,18
	07	C78		----------	NCB31CK-104X	C CAPACITOR	(Addition)	1	01,0A,0B,0C,0D,0E,0F,10,11,12,13,14,15,16,17,18
	07	C79		----------	NCB31CK-104X	C CAPACITOR	(Addition)	1	01,0A,0B,0C,0D,0E,0F,10,11,12,13,14,15,16,17,18
	07	C80		----------	NCB21CK-105X	C CAPACITOR	(Addition)	1	01,0A,0B,0C,0D,0E,0F,10,11,12,13,14,15,16,17,18
	07	C81		----------	NDC31HJ-120X	C CAPACITOR	(Addition)	1	01,0A,0B,0C,0D,0E,0F,10,11,12,13,14,15,16,17,18
	07	C82		----------	NDC31HJ-150X	C CAPACITOR	(Addition)	1	01,0A,0B,0C,0D,0E,0F,10,11,12,13,14,15,16,17,18
	07	C83		----------	NCB31CK-104X	C CAPACITOR	(Addition)	1	01,0A,0B,0C,0D,0E,0F,10,11,12,13,14,15,16,17,18
	07	C84		----------	NCB31CK-333X	C CAPACITOR	(Addition)	1	01,0A,0B,0C,0D,0E,0F,10,11,12,13,14,15,16,17,18
	07	C85		----------	NCB31CK-104X	C CAPACITOR	(Addition)	1	01,0A,0B,0C,0D,0E,0F,10,11,12,13,14,15,16,17,18
	07	C86		----------	NCB31CK-104X	C CAPACITOR	(Addition)	1	01,0A,0B,0C,0D,0E,0F,10,11,12,13,14,15,16,17,18
	07	C87		----------	NCB31CK-104X	C CAPACITOR	(Addition)	1	01,0A,0B,0C,0D,0E,0F,10,11,12,13,14,15,16,17,18
	07	C88		----------	NCB31CK-104X	C CAPACITOR	(Addition)	1	01,0A,0B,0C,0D,0E,0F,10,11,12,13,14,15,16,17,18
	07	C89		----------	NCB31HK-183X	C CAPACITOR	(Addition)	1	01,0A,0B,0C,0D,0E,0F,10,11,12,13,14,15,16,17,18
	07	C90		----------	NCB31HK-562X	C CAPACITOR	(Addition)	1	01,0A,0B,0C,0D,0E,0F,10,11,12,13,14,15,16,17,18
	07	C91		----------	NCB31CK-104X	C CAPACITOR	(Addition)	1	01,0A,0B,0C,0D,0E,0F,10,11,12,13,14,15,16,17,18
	07	C92		----------	NCB21CK-105X	C CAPACITOR	(Addition)	1	01,0A,0B,0C,0D,0E,0F,10,11,12,13,14,15,16,17,18
	07	C93		----------	NCB21CK-105X	C CAPACITOR	(Addition)	1	01,0A,0B,0C,0D,0E,0F,10,11,12,13,14,15,16,17,18
	07	C99		----------	NCB31CK-104X	C CAPACITOR	(Addition)	1	01,0A,0B,0C,0D,0E,0F,10,11,12,13,14,15,16,17,18
	07	C100		----------	NCB31CK-684X	C CAPACITOR	(Addition)	1	01,0A,0B,0C,0D,0E,0F,10,11,12,13,14,15,16,17,18
	07	C101		----------	NCB31CK-104X	C CAPACITOR	(Addition)	1	01,0A,0B,0C,0D,0E,0F,10,11,12,13,14,15,16,17,18
	07	C102		----------	NCB31CK-684X	C CAPACITOR	(Addition)	1	01,0A,0B,0C,0D,0E,0F,10,11,12,13,14,15,16,17,18
	07	C109		----------	NCB21CK-105X	C CAPACITOR	(Addition)	1	01,0A,0B,0C,0D,0E,0F,10,11,12,13,14,15,16,17,18
	07	C113		----------	NCB21CK-105X	C CAPACITOR	(Addition)	1	01,0A,0B,0C,0D,0E,0F,10,11,12,13,14,15,16,17,18
	07	C117		----------	NCB21CK-105X	C CAPACITOR	(Addition)	1	01,0A,0B,0C,0D,0E,0F,10,11,12,13,14,15,16,17,18
	07	C118		----------	NCB31HK-103X	C CAPACITOR	(Addition)	1	01,0A,0B,0C,0D,0E,0F,10,11,12,13,14,15,16,17,18
	07	C121		----------	NCB31CK-104X	C CAPACITOR	(Addition)	1	01,0A,0B,0C,0D,0E,0F,10,11,12,13,14,15,16,17,18
	07	C122		----------	NCB31CK-104X	C CAPACITOR	(Addition)	1	01,0A,0B,0C,0D,0E,0F,10,11,12,13,14,15,16,17,18
	07	C126		----------	NCB31CK-104X	C CAPACITOR	(Addition)	1	01,0A,0B,0C,0D,0E,0F,10,11,12,13,14,15,16,17,18
	07	C127		----------	NCB31CK-104X	C CAPACITOR	(Addition)	1	01,0A,0B,0C,0D,0E,0F,10,11,12,13,14,15,16,17,18
	07	C128		----------	NCB31CK-104X	C CAPACITOR	(Addition)	1	01,0A,0B,0C,0D,0E,0F,10,11,12,13,14,15,16,17,18
	07	C129		----------	NCB31CK-104X	C CAPACITOR	(Addition)	1	01,0A,0B,0C,0D,0E,0F,10,11,12,13,14,15,16,17,18
	07	C130		----------	NCB31CK-104X	C CAPACITOR	(Addition)	1	01,0A,0B,0C,0D,0E,0F,10,11,12,13,14,15,16,17,18
	07	C131		----------	NCB31CK-104X	C CAPACITOR	(Addition)	1	01,0A,0B,0C,0D,0E,0F,10,11,12,13,14,15,16,17,18
	07	C132		----------	NCB31CK-104X	C CAPACITOR	(Addition)	1	01,0A,0B,0C,0D,0E,0F,10,11,12,13,14,15,16,17,18
	07	C133		----------	NCB31CK-104X	C CAPACITOR	(Addition)	1	01,0A,0B,0C,0D,0E,0F,10,11,12,13,14,15,16,17,18
	07	C134		----------	NCB31CK-104X	C CAPACITOR	(Addition)	1	01,0A,0B,0C,0D,0E,0F,10,11,12,13,14,15,16,17,18
	07	C135		----------	NCB31CK-104X	C CAPACITOR	(Addition)	1	01,0A,0B,0C,0D,0E,0F,10,11,12,13,14,15,16,17,18
	07	C136		----------	NCB31CK-104X	C CAPACITOR	(Addition)	1	01,0A,0B,0C,0D,0E,0F,10,11,12,13,14,15,16,17,18
	07	C137		----------	NBE20JM-226X	TA E CAPACITOR	(Addition)	1	01,0A,0B,0C,0D,0E,0F,10,11,12,13,14,15,16,17,18
	07	C139		----------	NBE20JM-226X	TA E CAPACITOR	(Addition)	1	01,0A,0B,0C,0D,0E,0F,10,11,12,13,14,15,16,17,18
	07	C142		----------	NCB31CK-104X	C CAPACITOR	(Addition)	1	01,0A,0B,0C,0D,0E,0F,10,11,12,13,14,15,16,17,18
	07	C143		----------	NBE20JM-226X	TA E CAPACITOR	(Addition)	1	01,0A,0B,0C,0D,0E,0F,10,11,12,13,14,15,16,17,18
	07	C145		----------	NBE41AM-476X	TA E CAPACITOR	(Addition)	1	01,0A,0B,0C,0D,0E,0F,10,11,12,13,14,15,16,17,18
	07	C148		----------	NCB31HK-331X	C CAPACITOR	(Addition)	1	01,0A,0B,0C,0D,0E,0F,10,11,12,13,14,15,16,17,18
	07	C149		----------	NCB31CK-104X	C CAPACITOR	(Addition)	1	01,0A,0B,0C,0D,0E,0F,10,11,12,13,14,15,16,17,18
	07	C151		----------	NCB31CK-473X	C CAPACITOR	(Addition)	1	01,0A,0B,0C,0D,0E,0F,10,11,12,13,14,15,16,17,18
	07	C155		----------	NDC31HJ-101X	C CAPACITOR	(Addition)	1	01,0A,0B,0C,0D,0E,0F,10,11,12,13,14,15,16,17,18
	07	C156		----------	NCB31CK-104X	C CAPACITOR	(Addition)	1	01,0A,0B,0C,0D,0E,0F,10,11,12,13,14,15,16,17,18
	07	C161		----------	NCB31CK-104X	C CAPACITOR	(Addition)	1	01,0A,0B,0C,0D,0E,0F,10,11,12,13,14,15,16,17,18
	07	C162		----------	NCB31CK-104X	C CAPACITOR	(Addition)	1	01,0A,0B,0C,0D,0E,0F,10,11,12,13,14,15,16,17,18
	07	C164		----------	NCB21CK-105X	C CAPACITOR	(Addition)	1	01,0A,0B,0C,0D,0E,0F,10,11,12,13,14,15,16,17,18
	07	C165		----------	NCB31CK-104X	C CAPACITOR	(Addition)	1	01,0A,0B,0C,0D,0E,0F,10,11,12,13,14,15,16,17,18
	07	C167		----------	NDC31HJ-272X	C CAPACITOR	(Addition)	1	01,0A,0B,0C,0D,0E,0F,10,11,12,13,14,15,16,17,18
	07	C170		----------	NCB31CK-104X	C CAPACITOR	(Addition)	1	01,0A,0B,0C,0D,0E,0F,10,11,12,13,14,15,16,17,18
	07	C173		----------	NCB31CK-104X	C CAPACITOR	(Addition)	1	01,0A,0B,0C,0D,0E,0F,10,11,12,13,14,15,16,17,18

⚠	Symbol		or	Part No. <Rev.002>	Part No. <Rev.003>	Part Name	Description	Qty	Models
	07	C174		----------	NCB31CK-104X	C CAPACITOR	(Addition)	1	01,0A,0B,0C,0D,0E,0F,10,11,12,13,14,15,16,17,18
	07	C175		----------	NBE51CM-476X	TA E CAPACITOR	(Addition)	1	01,0A,0B,0C,0D,0E,0F,10,11,12,13,14,15,16,17,18
	07	C176		----------	NCB31CK-104X	C CAPACITOR	(Addition)	1	01,0A,0B,0C,0D,0E,0F,10,11,12,13,14,15,16,17,18
	07	C177		----------	NCB31CK-104X	C CAPACITOR	(Addition)	1	01,0A,0B,0C,0D,0E,0F,10,11,12,13,14,15,16,17,18
	07	C178		----------	NCB31CK-104X	C CAPACITOR	(Addition)	1	01,0A,0B,0C,0D,0E,0F,10,11,12,13,14,15,16,17,18
	07	C197		----------	NCB31CK-104X	C CAPACITOR	(Addition)	1	01,0A,0B,0C,0D,0E,0F,10,11,12,13,14,15,16,17,18
	07	C199		----------	NCB31CK-104X	C CAPACITOR	(Addition)	1	01,0A,0B,0C,0D,0E,0F,10,11,12,13,14,15,16,17,18
	07	C200		----------	NBE40JM-476X	TA E CAPACITOR	(Addition)	1	01,0A,0B,0C,0D,0E,0F,10,11,12,13,14,15,16,17,18
	07	C201		----------	NCB31CK-104X	C CAPACITOR	(Addition)	1	01,0A,0B,0C,0D,0E,0F,10,11,12,13,14,15,16,17,18
	07	C205		----------	NCB21AK-225X	C CAPACITOR	(Addition)	1	01,0A,0B,0C,0D,0E,0F,10,11,12,13,14,15,16,17,18
	07	C206		----------	NDC31HJ-222X	C CAPACITOR	(Addition)	1	01,0A,0B,0C,0D,0E,0F,10,11,12,13,14,15,16,17,18
	07	C211		----------	NCB31CK-104X	C CAPACITOR	(Addition)	1	01,0A,0B,0C,0D,0E,0F,10,11,12,13,14,15,16,17,18
	07	C215		----------	NDC31HJ-181X	C CAPACITOR	(Addition)	1	01,0A,0B,0C,0D,0E,0F,10,11,12,13,14,15,16,17,18
	07	C216		----------	NCB31CK-104X	C CAPACITOR	(Addition)	1	01,0A,0B,0C,0D,0E,0F,10,11,12,13,14,15,16,17,18
	07	C218		----------	NCB31CK-104X	C CAPACITOR	(Addition)	1	01,0A,0B,0C,0D,0E,0F,10,11,12,13,14,15,16,17,18
	07	C219		----------	NCB31CK-223X	C CAPACITOR	(Addition)	1	01,0A,0B,0C,0D,0E,0F,10,11,12,13,14,15,16,17,18
	07	C220		----------	NCB31HK-102X	C CAPACITOR	(Addition)	1	01,0A,0B,0C,0D,0E,0F,10,11,12,13,14,15,16,17,18
	07	C222		----------	NCB31CK-104X	C CAPACITOR	(Addition)	1	01,0A,0B,0C,0D,0E,0F,10,11,12,13,14,15,16,17,18
	07	C223		----------	NCB31HK-102X	C CAPACITOR	(Addition)	1	01,0A,0B,0C,0D,0E,0F,10,11,12,13,14,15,16,17,18
	07	C224		----------	NCB21AK-225X	C CAPACITOR	(Addition)	1	01,0A,0B,0C,0D,0E,0F,10,11,12,13,14,15,16,17,18
	07	C225		----------	NBE51CM-476X	TA E CAPACITOR	(Addition)	1	01,0A,0B,0C,0D,0E,0F,10,11,12,13,14,15,16,17,18
	07	C228		----------	NCB31HK-102X	C CAPACITOR	(Addition)	1	01,0A,0B,0C,0D,0E,0F,10,11,12,13,14,15,16,17,18
	07	C229		----------	NCB31CK-223X	C CAPACITOR	(Addition)	1	01,0A,0B,0C,0D,0E,0F,10,11,12,13,14,15,16,17,18
	07	C232		----------	NBE51CM-476X	TA E CAPACITOR	(Addition)	1	01,0A,0B,0C,0D,0E,0F,10,11,12,13,14,15,16,17,18
	07	C233		----------	NCB21CK-105X	C CAPACITOR	(Addition)	1	01,0A,0B,0C,0D,0E,0F,10,11,12,13,14,15,16,17,18
	07	C235		----------	NCB31HK-102X	C CAPACITOR	(Addition)	1	01,0A,0B,0C,0D,0E,0F,10,11,12,13,14,15,16,17,18
	07	C237		----------	NDC31HJ-221X	C CAPACITOR	(Addition)	1	01,0A,0B,0C,0D,0E,0F,10,11,12,13,14,15,16,17,18
	07	C238		----------	NCB31CK-104X	C CAPACITOR	(Addition)	1	01,0A,0B,0C,0D,0E,0F,10,11,12,13,14,15,16,17,18
	07	C240		----------	NCB31CK-104X	C CAPACITOR	(Addition)	1	01,0A,0B,0C,0D,0E,0F,10,11,12,13,14,15,16,17,18
	07	C241		----------	NCB31CK-104X	C CAPACITOR	(Addition)	1	01,0A,0B,0C,0D,0E,0F,10,11,12,13,14,15,16,17,18
	07	R36		----------	NRSA6AD-153W	MG RESISTOR	(Addition)	1	01,0A,0B,0C,0D,0E,0F,10,11,12,13,14,15,16,17,18
	07	R37		----------	NRSA6AD-153W	MG RESISTOR	(Addition)	1	01,0A,0B,0C,0D,0E,0F,10,11,12,13,14,15,16,17,18
	07	R46		----------	NRSA6AD-103W	MG RESISTOR	(Addition)	1	01,0A,0B,0C,0D,0E,0F,10,11,12,13,14,15,16,17,18
	07	R47		----------	NRSA6AD-103W	MG RESISTOR	(Addition)	1	01,0A,0B,0C,0D,0E,0F,10,11,12,13,14,15,16,17,18
	07	R49		----------	NRSA63J-0R0X	MG RESISTOR	(Addition)	1	01,0A,0B,0C,0D,0E,0F,10,11,12,13,14,15,16,17,18
	07	R51		----------	NRSA63J-0R0X	MG RESISTOR	(Addition)	1	01,0A,0B,0C,0D,0E,0F,10,11,12,13,14,15,16,17,18
	07	R52		----------	NRSA6AD-103W	MG RESISTOR	(Addition)	1	01,0A,0B,0C,0D,0E,0F,10,11,12,13,14,15,16,17,18
	07	R53		----------	NRSA6AD-103W	MG RESISTOR	(Addition)	1	01,0A,0B,0C,0D,0E,0F,10,11,12,13,14,15,16,17,18
	07	R54		----------	NRSA6AD-910W	MG RESISTOR	(Addition)	1	01,0A,0B,0C,0D,0E,0F,10,11,12,13,14,15,16,17,18
	07	R55		----------	NRSA6AD-910W	MG RESISTOR	(Addition)	1	01,0A,0B,0C,0D,0E,0F,10,11,12,13,14,15,16,17,18
	07	R56		----------	NRSA63D-432X	MG RESISTOR	(Addition)	1	01,0A,0B,0C,0D,0E,0F,10,11,12,13,14,15,16,17,18
	07	R57		----------	NRSA63D-242X	MG RESISTOR	(Addition)	1	01,0A,0B,0C,0D,0E,0F,10,11,12,13,14,15,16,17,18
	07	R58		----------	NRS125J-390X	MG RESISTOR	(Addition)	1	01,0A,0B,0C,0D,0E,0F,10,11,12,13,14,15,16,17,18
	07	R59		----------	NRSA63J-2R2X	MG RESISTOR	(Addition)	1	01,0A,0B,0C,0D,0E,0F,10,11,12,13,14,15,16,17,18
	07	R60		----------	NRSA6AD-102W	MG RESISTOR	(Addition)	1	01,0A,0B,0C,0D,0E,0F,10,11,12,13,14,15,16,17,18
	07	R61		----------	NRSA6AD-471W	MG RESISTOR	(Addition)	1	01,0A,0B,0C,0D,0E,0F,10,11,12,13,14,15,16,17,18
	07	R62		----------	NRSA6AD-471W	MG RESISTOR	(Addition)	1	01,0A,0B,0C,0D,0E,0F,10,11,12,13,14,15,16,17,18
	07	R64		----------	NRSA63D-432X	MG RESISTOR	(Addition)	1	01,0A,0B,0C,0D,0E,0F,10,11,12,13,14,15,16,17,18
	07	R65		----------	NRSA63D-242X	MG RESISTOR	(Addition)	1	01,0A,0B,0C,0D,0E,0F,10,11,12,13,14,15,16,17,18
	07	R66		----------	NRS125J-120X	MG RESISTOR	(Addition)	1	01,0A,0B,0C,0D,0E,0F,10,11,12,13,14,15,16,17,18
	07	R67		----------	NRSA63J-2R2X	MG RESISTOR	(Addition)	1	01,0A,0B,0C,0D,0E,0F,10,11,12,13,14,15,16,17,18
	07	R68		----------	NRSA6AD-102W	MG RESISTOR	(Addition)	1	01,0A,0B,0C,0D,0E,0F,10,11,12,13,14,15,16,17,18
	07	R69		----------	NRSA63J-471X	MG RESISTOR	(Addition)	1	01,0A,0B,0C,0D,0E,0F,10,11,12,13,14,15,16,17,18
	07	R70		----------	NRSA6AD-331W	MG RESISTOR	(Addition)	1	01,0A,0B,0C,0D,0E,0F,10,11,12,13,14,15,16,17,18
	07	R79		----------	NRSA6AD-104W	MG RESISTOR	(Addition)	1	01,0A,0B,0C,0D,0E,0F,10,11,12,13,14,15,16,17,18
	07	R83		----------	NRSA6AD-103W	MG RESISTOR	(Addition)	1	01,0A,0B,0C,0D,0E,0F,10,11,12,13,14,15,16,17,18
	07	R87		----------	NRSA63J-103X	MG RESISTOR	(Addition)	1	01,0A,0B,0C,0D,0E,0F,10,11,12,13,14,15,16,17,18
	07	R89		----------	NRSA63J-103X	MG RESISTOR	(Addition)	1	01,0A,0B,0C,0D,0E,0F,10,11,12,13,14,15,16,17,18
	07	R90		----------	NRSA6AD-103W	MG RESISTOR	(Addition)	1	01,0A,0B,0C,0D,0E,0F,10,11,12,13,14,15,16,17,18
	07	R92		----------	NRSA63J-473X	MG RESISTOR	(Addition)	1	01,0A,0B,0C,0D,0E,0F,10,11,12,13,14,15,16,17,18
	07	R93		----------	NRSA6AD-203W	MG RESISTOR	(Addition)	1	01,0A,0B,0C,0D,0E,0F,10,11,12,13,14,15,16,17,18
	07	R94		----------	NRSA6AD-223W	MG RESISTOR	(Addition)	1	01,0A,0B,0C,0D,0E,0F,10,11,12,13,14,15,16,17,18
	07	R99		----------	NRSA63J-0R0X	MG RESISTOR	(Addition)	1	01,0A,0B,0C,0D,0E,0F,10,11,12,13,14,15,16,17,18
	07	R100		----------	NRSA6AD-103W	MG RESISTOR	(Addition)	1	01,0A,0B,0C,0D,0E,0F,10,11,12,13,14,15,16,17,18
	07	R106		----------	NRSA63J-103X	MG RESISTOR	(Addition)	1	01,0A,0B,0C,0D,0E,0F,10,11,12,13,14,15,16,17,18
	07	R107		----------	NRSA63J-152X	MG RESISTOR	(Addition)	1	01,0A,0B,0C,0D,0E,0F,10,11,12,13,14,15,16,17,18
	07	R109		----------	NRSA63J-0R0X	MG RESISTOR	(Addition)	1	01,0A,0B,0C,0D,0E,0F,10,11,12,13,14,15,16,17,18
	07	R112		----------	NRSA63J-0R0X	MG RESISTOR	(Addition)	1	01,0A,0B,0C,0D,0E,0F,10,11,12,13,14,15,16,17,18
	07	R113		----------	NRSA63J-0R0X	MG RESISTOR	(Addition)	1	01,0A,0B,0C,0D,0E,0F,10,11,12,13,14,15,16,17,18

⚠	Symbol		or	Part No. <Rev.002>	Part No. <Rev.003>	Part Name	Description	Qty	Models
	07	R114		----------	NRSA63J-103X	MG RESISTOR	(Addition)	1	01,0A,0B,0C,0D,0E,0F,10,11,12,13,14,15,16,17,18
	07	R117		----------	NRSA6AD-103W	MG RESISTOR	(Addition)	1	01,0A,0B,0C,0D,0E,0F,10,11,12,13,14,15,16,17,18
	07	R118		----------	NRSA6AD-101W	MG RESISTOR	(Addition)	1	01,0A,0B,0C,0D,0E,0F,10,11,12,13,14,15,16,17,18
	07	R119		----------	NRSA63D-471X	MG RESISTOR	(Addition)	1	01,0A,0B,0C,0D,0E,0F,10,11,12,13,14,15,16,17,18
	07	R120		----------	NRSA63J-152X	MG RESISTOR	(Addition)	1	01,0A,0B,0C,0D,0E,0F,10,11,12,13,14,15,16,17,18
	07	R122		----------	NRSA6AD-103W	MG RESISTOR	(Addition)	1	01,0A,0B,0C,0D,0E,0F,10,11,12,13,14,15,16,17,18
	07	R128		----------	NRSA6AD-270W	MG RESISTOR	(Addition)	1	01,0A,0B,0C,0D,0E,0F,10,11,12,13,14,15,16,17,18
	07	R129		----------	NRSA6AD-103W	MG RESISTOR	(Addition)	1	01,0A,0B,0C,0D,0E,0F,10,11,12,13,14,15,16,17,18
	07	R131		----------	NRSA6AD-102W	MG RESISTOR	(Addition)	1	01,0A,0B,0C,0D,0E,0F,10,11,12,13,14,15,16,17,18
	07	R132		----------	NRSA6AD-102W	MG RESISTOR	(Addition)	1	01,0A,0B,0C,0D,0E,0F,10,11,12,13,14,15,16,17,18
	07	R133		----------	NRSA6AD-223W	MG RESISTOR	(Addition)	1	01,0A,0B,0C,0D,0E,0F,10,11,12,13,14,15,16,17,18
	07	R134		----------	NRSA6AD-104W	MG RESISTOR	(Addition)	1	01,0A,0B,0C,0D,0E,0F,10,11,12,13,14,15,16,17,18
	07	R136		----------	NRSA63J-0R0X	MG RESISTOR	(Addition)	1	01,0A,0B,0C,0D,0E,0F,10,11,12,13,14,15,16,17,18
	07	R137		----------	NRSA63J-0R0X	MG RESISTOR	(Addition)	1	01,0A,0B,0C,0D,0E,0F,10,11,12,13,14,15,16,17,18
	07	R138		----------	NRSA63J-0R0X	MG RESISTOR	(Addition)	1	01,0A,0B,0C,0D,0E,0F,10,11,12,13,14,15,16,17,18
	07	R141		----------	NRSA63D-332X	MG RESISTOR	(Addition)	1	01,0A,0B,0C,0D,0E,0F,10,11,12,13,14,15,16,17,18
	07	R142		----------	NRSA63J-0R0X	MG RESISTOR	(Addition)	1	01,0A,0B,0C,0D,0E,0F,10,11,12,13,14,15,16,17,18
	07	R143		----------	NRSA6AD-101W	MG RESISTOR	(Addition)	1	01,0A,0B,0C,0D,0E,0F,10,11,12,13,14,15,16,17,18
	07	R144		----------	NRSA6AD-103W	MG RESISTOR	(Addition)	1	01,0A,0B,0C,0D,0E,0F,10,11,12,13,14,15,16,17,18
	07	R145		----------	NRSA6AD-103W	MG RESISTOR	(Addition)	1	01,0A,0B,0C,0D,0E,0F,10,11,12,13,14,15,16,17,18
	07	R152		----------	NRSA63J-0R0X	MG RESISTOR	(Addition)	1	01,0A,0B,0C,0D,0E,0F,10,11,12,13,14,15,16,17,18
	07	R153		----------	NRSA63D-162X	MG RESISTOR	(Addition)	1	01,0A,0B,0C,0D,0E,0F,10,11,12,13,14,15,16,17,18
	07	R156		----------	NRSA63J-0R0X	MG RESISTOR	(Addition)	1	01,0A,0B,0C,0D,0E,0F,10,11,12,13,14,15,16,17,18
	07	R160		----------	NRSA63D-303X	MG RESISTOR	(Addition)	1	01,0A,0B,0C,0D,0E,0F,10,11,12,13,14,15,16,17,18
	07	R163		----------	NRSA6AD-103W	MG RESISTOR	(Addition)	1	01,0A,0B,0C,0D,0E,0F,10,11,12,13,14,15,16,17,18
	07	R164		----------	NRSA63J-181X	MG RESISTOR	(Addition)	1	01,0A,0B,0C,0D,0E,0F,10,11,12,13,14,15,16,17,18
	07	R165		----------	NRSA6AD-473W	MG RESISTOR	(Addition)	1	01,0A,0B,0C,0D,0E,0F,10,11,12,13,14,15,16,17,18
	07	R166		----------	NRSA6AD-473W	MG RESISTOR	(Addition)	1	01,0A,0B,0C,0D,0E,0F,10,11,12,13,14,15,16,17,18
	07	R168		----------	NRSA6AD-473W	MG RESISTOR	(Addition)	1	01,0A,0B,0C,0D,0E,0F,10,11,12,13,14,15,16,17,18
	07	R170		----------	NRSA6AD-471W	MG RESISTOR	(Addition)	1	01,0A,0B,0C,0D,0E,0F,10,11,12,13,14,15,16,17,18
	07	R171		----------	NRSA63J-105X	MG RESISTOR	(Addition)	1	01,0A,0B,0C,0D,0E,0F,10,11,12,13,14,15,16,17,18
	07	R172		----------	NRSA6AD-101W	MG RESISTOR	(Addition)	1	01,0A,0B,0C,0D,0E,0F,10,11,12,13,14,15,16,17,18
	07	R173		----------	NRSA6AD-101W	MG RESISTOR	(Addition)	1	01,0A,0B,0C,0D,0E,0F,10,11,12,13,14,15,16,17,18
	07	R174		----------	NRSA6AD-101W	MG RESISTOR	(Addition)	1	01,0A,0B,0C,0D,0E,0F,10,11,12,13,14,15,16,17,18
	07	R177		----------	NRSA63J-0R0X	MG RESISTOR	(Addition)	1	01,0A,0B,0C,0D,0E,0F,10,11,12,13,14,15,16,17,18
	07	R178		----------	NRSA63J-0R0X	MG RESISTOR	(Addition)	1	01,0A,0B,0C,0D,0E,0F,10,11,12,13,14,15,16,17,18
	07	R181		----------	NQR0129-002X	FERRITE BEADS	(Addition)	1	01,0A,0B,0C,0D,0E,0F,10,11,12,13,14,15,16,17,18
	07	R187		----------	NRSA63J-0R0X	MG RESISTOR	(Addition)	1	01,0A,0B,0C,0D,0E,0F,10,11,12,13,14,15,16,17,18
	07	R189		----------	NRSA6AD-331W	MG RESISTOR	(Addition)	1	01,0A,0B,0C,0D,0E,0F,10,11,12,13,14,15,16,17,18
	07	R190		----------	NRSA6AD-331W	MG RESISTOR	(Addition)	1	01,0A,0B,0C,0D,0E,0F,10,11,12,13,14,15,16,17,18
	07	R195		----------	NRSA6AD-102W	MG RESISTOR	(Addition)	1	01,0A,0B,0C,0D,0E,0F,10,11,12,13,14,15,16,17,18
	07	R211		----------	NRSA6AD-473W	MG RESISTOR	(Addition)	1	01,0A,0B,0C,0D,0E,0F,10,11,12,13,14,15,16,17,18
	07	R213		----------	NRSA63J-100X	MG RESISTOR	(Addition)	1	01,0A,0B,0C,0D,0E,0F,10,11,12,13,14,15,16,17,18
	07	R215		----------	NRSA63D-122X	MG RESISTOR	(Addition)	1	01,0A,0B,0C,0D,0E,0F,10,11,12,13,14,15,16,17,18
	07	R216		----------	NRSA63D-122X	MG RESISTOR	(Addition)	1	01,0A,0B,0C,0D,0E,0F,10,11,12,13,14,15,16,17,18
	07	R217		----------	NRSA6AD-100W	MG RESISTOR	(Addition)	1	01,0A,0B,0C,0D,0E,0F,10,11,12,13,14,15,16,17,18
	07	R219		----------	NRSA63J-150X	MG RESISTOR	(Addition)	1	01,0A,0B,0C,0D,0E,0F,10,11,12,13,14,15,16,17,18
	07	R220		----------	NRSA63J-0R0X	MG RESISTOR	(Addition)	1	01,0A,0B,0C,0D,0E,0F,10,11,12,13,14,15,16,17,18
	07	R226		----------	NRSA6AD-473W	MG RESISTOR	(Addition)	1	01,0A,0B,0C,0D,0E,0F,10,11,12,13,14,15,16,17,18
	07	R229		----------	NRSA63J-0R0X	MG RESISTOR	(Addition)	1	01,0A,0B,0C,0D,0E,0F,10,11,12,13,14,15,16,17,18
	07	R233		----------	NRSA6AD-103W	MG RESISTOR	(Addition)	1	01,0A,0B,0C,0D,0E,0F,10,11,12,13,14,15,16,17,18
	07	R264		----------	NRSA63J-0R0X	MG RESISTOR	(Addition)	1	01,0A,0B,0C,0D,0E,0F,10,11,12,13,14,15,16,17,18
	07	R265		----------	NRSA6AD-103W	MG RESISTOR	(Addition)	1	01,0A,0B,0C,0D,0E,0F,10,11,12,13,14,15,16,17,18
	07	R267		----------	NRSA63D-472X	MG RESISTOR	(Addition)	1	01,0A,0B,0C,0D,0E,0F,10,11,12,13,14,15,16,17,18
	07	R268		----------	NRSA63J-0R0X	MG RESISTOR	(Addition)	1	01,0A,0B,0C,0D,0E,0F,10,11,12,13,14,15,16,17,18
	07	R305		----------	NRS181F-330X	MG RESISTOR	(Addition)	1	01,0A,0B,0C,0D,0E,0F,10,11,12,13,14,15,16,17,18
	07	R306		----------	NRS181F-330X	MG RESISTOR	(Addition)	1	01,0A,0B,0C,0D,0E,0F,10,11,12,13,14,15,16,17,18
	07	R309		----------	NRS125J-R47X	MG RESISTOR	(Addition)	1	01,0A,0B,0C,0D,0E,0F,10,11,12,13,14,15,16,17,18
	07	R310		----------	NRSA6AD-333W	MG RESISTOR	(Addition)	1	01,0A,0B,0C,0D,0E,0F,10,11,12,13,14,15,16,17,18
	07	R311		----------	NRSA63J-391X	MG RESISTOR	(Addition)	1	01,0A,0B,0C,0D,0E,0F,10,11,12,13,14,15,16,17,18
	07	R318		----------	NRSA63J-203X	MG RESISTOR	(Addition)	1	01,0A,0B,0C,0D,0E,0F,10,11,12,13,14,15,16,17,18
	07	R319		----------	NRSA6AD-622W	MG RESISTOR	(Addition)	1	01,0A,0B,0C,0D,0E,0F,10,11,12,13,14,15,16,17,18
	07	R323		----------	NRSA6AD-391W	MG RESISTOR	(Addition)	1	01,0A,0B,0C,0D,0E,0F,10,11,12,13,14,15,16,17,18
	07	R324		----------	NRSA63D-682X	MG RESISTOR	(Addition)	1	01,0A,0B,0C,0D,0E,0F,10,11,12,13,14,15,16,17,18
	07	R325		----------	NRSA63D-753X	MG RESISTOR	(Addition)	1	01,0A,0B,0C,0D,0E,0F,10,11,12,13,14,15,16,17,18
	07	R329		----------	NRS125J-R47X	MG RESISTOR	(Addition)	1	01,0A,0B,0C,0D,0E,0F,10,11,12,13,14,15,16,17,18
	07	R352		----------	NRSA6AD-102W	MG RESISTOR	(Addition)	1	01,0A,0B,0C,0D,0E,0F,10,11,12,13,14,15,16,17,18
	07	R357		----------	NRS125J-R22X	MG RESISTOR	(Addition)	1	01,0A,0B,0C,0D,0E,0F,10,11,12,13,14,15,16,17,18
	07	R359		----------	NRSA6AD-243W	MG RESISTOR	(Addition)	1	01,0A,0B,0C,0D,0E,0F,10,11,12,13,14,15,16,17,18
	07	R362		----------	NRSA63J-103X	MG RESISTOR	(Addition)	1	01,0A,0B,0C,0D,0E,0F,10,11,12,13,14,15,16,17,18
	07	R364		----------	NRSA63J-391X	MG RESISTOR	(Addition)	1	01,0A,0B,0C,0D,0E,0F,10,11,12,13,14,15,16,17,18

⚠	Symbol		or	Part No. <Rev.002>	Part No. <Rev.003>	Part Name	Description	Qty	Models
	07	R365		----------	NRSA6AD-103W	MG RESISTOR	(Addition)	1	01,0A,0B,0C,0D,0E,0F,10,11,12,13,14,15,16,17,18
	07	R366		----------	NRS125J-R22X	MG RESISTOR	(Addition)	1	01,0A,0B,0C,0D,0E,0F,10,11,12,13,14,15,16,17,18
	07	R367		----------	NRSA6AD-104W	MG RESISTOR	(Addition)	1	01,0A,0B,0C,0D,0E,0F,10,11,12,13,14,15,16,17,18
	07	R369		----------	NRS125J-R22X	MG RESISTOR	(Addition)	1	01,0A,0B,0C,0D,0E,0F,10,11,12,13,14,15,16,17,18
	07	R371		----------	NRSA63J-0R0X	MG RESISTOR	(Addition)	1	01,0A,0B,0C,0D,0E,0F,10,11,12,13,14,15,16,17,18
	07	R375		----------	NRSA6AD-152W	MG RESISTOR	(Addition)	1	01,0A,0B,0C,0D,0E,0F,10,11,12,13,14,15,16,17,18
	07	R376		----------	NRSA6AD-822W	MG RESISTOR	(Addition)	1	01,0A,0B,0C,0D,0E,0F,10,11,12,13,14,15,16,17,18
	07	R379		----------	NRSA63D-332X	MG RESISTOR	(Addition)	1	01,0A,0B,0C,0D,0E,0F,10,11,12,13,14,15,16,17,18
	07	R380		----------	NRSA63J-223X	MG RESISTOR	(Addition)	1	01,0A,0B,0C,0D,0E,0F,10,11,12,13,14,15,16,17,18
	07	R382		----------	NRSA6AD-102W	MG RESISTOR	(Addition)	1	01,0A,0B,0C,0D,0E,0F,10,11,12,13,14,15,16,17,18
	07	R383		----------	NRSA63J-223X	MG RESISTOR	(Addition)	1	01,0A,0B,0C,0D,0E,0F,10,11,12,13,14,15,16,17,18
	07	R384		----------	NRSA6AD-104W	MG RESISTOR	(Addition)	1	01,0A,0B,0C,0D,0E,0F,10,11,12,13,14,15,16,17,18
	07	R386		----------	NRSA6AD-184W	MG RESISTOR	(Addition)	1	01,0A,0B,0C,0D,0E,0F,10,11,12,13,14,15,16,17,18
	07	R387		----------	NRSA63D-473X	MG RESISTOR	(Addition)	1	01,0A,0B,0C,0D,0E,0F,10,11,12,13,14,15,16,17,18
	07	R391		----------	NRSA6AD-822W	MG RESISTOR	(Addition)	1	01,0A,0B,0C,0D,0E,0F,10,11,12,13,14,15,16,17,18
	07	R392		----------	NRSA63J-103X	MG RESISTOR	(Addition)	1	01,0A,0B,0C,0D,0E,0F,10,11,12,13,14,15,16,17,18
	07	R393		----------	NRSA6AD-103W	MG RESISTOR	(Addition)	1	01,0A,0B,0C,0D,0E,0F,10,11,12,13,14,15,16,17,18
	07	R394		----------	NRSA63J-273X	MG RESISTOR	(Addition)	1	01,0A,0B,0C,0D,0E,0F,10,11,12,13,14,15,16,17,18
	07	R397		----------	NRSA6AD-101W	MG RESISTOR	(Addition)	1	01,0A,0B,0C,0D,0E,0F,10,11,12,13,14,15,16,17,18
	07	R400		----------	NRSA6AD-153W	MG RESISTOR	(Addition)	1	01,0A,0B,0C,0D,0E,0F,10,11,12,13,14,15,16,17,18
	07	R402		----------	NRSA6AD-473W	MG RESISTOR	(Addition)	1	01,0A,0B,0C,0D,0E,0F,10,11,12,13,14,15,16,17,18
	07	R403		----------	NRSA63J-101X	MG RESISTOR	(Addition)	1	01,0A,0B,0C,0D,0E,0F,10,11,12,13,14,15,16,17,18
	07	R406		----------	NRS125J-R22X	MG RESISTOR	(Addition)	1	01,0A,0B,0C,0D,0E,0F,10,11,12,13,14,15,16,17,18
	07	R417		----------	NRSA63J-183X	MG RESISTOR	(Addition)	1	01,0A,0B,0C,0D,0E,0F,10,11,12,13,14,15,16,17,18
	07	R419		----------	NRSA63D-104X	MG RESISTOR	(Addition)	1	01,0A,0B,0C,0D,0E,0F,10,11,12,13,14,15,16,17,18
	07	R420		----------	NRSA6AD-184W	MG RESISTOR	(Addition)	1	01,0A,0B,0C,0D,0E,0F,10,11,12,13,14,15,16,17,18
	07	L302		----------	NQLJ6GK-100X	COIL	(Addition)	1	01,0A,0B,0C,0D,0E,0F,10,11,12,13,14,15,16,17,18
	07	L303		----------	NRSA02J-0R0X	MG RESISTOR	(Addition)	1	01,0A,0B,0C,0D,0E,0F,10,11,12,13,14,15,16,17,18
	07	CN1		----------	QGF0523F3-20W	CONNECTOR	(Addition)	1	01,0A,0B,0C,0D,0E,0F,10,11,12,13,14,15,16,17,18
	07	CN2		----------	QGA1002F1-03X	CONNECTOR	(Addition)	1	01,0A,0B,0C,0D,0E,0F,10,11,12,13,14,15,16,17,18
	07	CN101		----------	QGF0522F2-26W	CONNECTOR	(Addition)	1	01,0A,0B,0C,0D,0E,0F,10,11,12,13,14,15,16,17,18
	07	CN403		----------	QGF0534F3-50X	CONNECTOR	(Addition)	1	01,0A,0B,0C,0D,0E,0F,10,11,12,13,14,15,16,17,18
	07	K101		----------	NQR0007-002X	FERRITE BEADS	(Addition)	1	01,0A,0B,0C,0D,0E,0F,10,11,12,13,14,15,16,17,18
	07	K102		----------	NQR0007-002X	FERRITE BEADS	(Addition)	1	01,0A,0B,0C,0D,0E,0F,10,11,12,13,14,15,16,17,18
	07	K103		----------	NQR0502-001X	FERRITE BEADS	(Addition)	1	01,0A,0B,0C,0D,0E,0F,10,11,12,13,14,15,16,17,18
	07	K104		----------	NQR0502-001X	FERRITE BEADS	(Addition)	1	01,0A,0B,0C,0D,0E,0F,10,11,12,13,14,15,16,17,18
	07	K105		----------	NRSA63J-0R0X	MG RESISTOR	(Addition)	1	01,0A,0B,0C,0D,0E,0F,10,11,12,13,14,15,16,17,18
	07	K108		----------	NQR0129-002X	FERRITE BEADS	(Addition)	1	01,0A,0B,0C,0D,0E,0F,10,11,12,13,14,15,16,17,18
	07	K110		----------	NQR0129-002X	FERRITE BEADS	(Addition)	1	01,0A,0B,0C,0D,0E,0F,10,11,12,13,14,15,16,17,18
	07	K111		----------	NQR0129-002X	FERRITE BEADS	(Addition)	1	01,0A,0B,0C,0D,0E,0F,10,11,12,13,14,15,16,17,18
	07	K113		----------	NQR0502-001X	FERRITE BEADS	(Addition)	1	01,0A,0B,0C,0D,0E,0F,10,11,12,13,14,15,16,17,18
	07	K114		----------	NQR0022-005X	FERRITE BEADS	(Addition)	1	01,0A,0B,0C,0D,0E,0F,10,11,12,13,14,15,16,17,18
	07	K115		----------	NQR0022-005X	FERRITE BEADS	(Addition)	1	01,0A,0B,0C,0D,0E,0F,10,11,12,13,14,15,16,17,18
	07	K117		----------	NQR0022-005X	FERRITE BEADS	(Addition)	1	01,0A,0B,0C,0D,0E,0F,10,11,12,13,14,15,16,17,18
	07	K118		----------	NRSA63J-0R0X	MG RESISTOR	(Addition)	1	01,0A,0B,0C,0D,0E,0F,10,11,12,13,14,15,16,17,18
	07	K119		----------	NRSA63J-0R0X	MG RESISTOR	(Addition)	1	01,0A,0B,0C,0D,0E,0F,10,11,12,13,14,15,16,17,18
	07	K120		----------	NRSA63J-0R0X	MG RESISTOR	(Addition)	1	01,0A,0B,0C,0D,0E,0F,10,11,12,13,14,15,16,17,18
	07	K121		----------	NRSA63J-0R0X	MG RESISTOR	(Addition)	1	01,0A,0B,0C,0D,0E,0F,10,11,12,13,14,15,16,17,18
	07	K131		----------	NQR0022-005X	FERRITE BEADS	(Addition)	1	01,0A,0B,0C,0D,0E,0F,10,11,12,13,14,15,16,17,18
	07	K132		----------	NQR0022-005X	FERRITE BEADS	(Addition)	1	01,0A,0B,0C,0D,0E,0F,10,11,12,13,14,15,16,17,18
	07	K133		----------	NQR0022-005X	FERRITE BEADS	(Addition)	1	01,0A,0B,0C,0D,0E,0F,10,11,12,13,14,15,16,17,18
	07	K134		----------	NRSA63J-0R0X	MG RESISTOR	(Addition)	1	01,0A,0B,0C,0D,0E,0F,10,11,12,13,14,15,16,17,18
	07	K135		----------	NQR0022-005X	FERRITE BEADS	(Addition)	1	01,0A,0B,0C,0D,0E,0F,10,11,12,13,14,15,16,17,18
	07	K136		----------	NQR0022-005X	FERRITE BEADS	(Addition)	1	01,0A,0B,0C,0D,0E,0F,10,11,12,13,14,15,16,17,18
	07	K137		----------	NRSA63J-0R0X	MG RESISTOR	(Addition)	1	01,0A,0B,0C,0D,0E,0F,10,11,12,13,14,15,16,17,18
	07	K141		----------	NRSA63J-0R0X	MG RESISTOR	(Addition)	1	01,0A,0B,0C,0D,0E,0F,10,11,12,13,14,15,16,17,18
	07	K142		----------	NRSA63J-0R0X	MG RESISTOR	(Addition)	1	01,0A,0B,0C,0D,0E,0F,10,11,12,13,14,15,16,17,18

⚠	Symbol		or	Part No. <Rev.002>	Part No. <Rev.003>	Part Name	Description	Qty	Models
	07	S1		----------	NSW0313-001X	DETECT SWITCH	(Addition)	1	01,0A,0B,0C,0D,0E,0F,10,11,12,13,14,15,16,17,18
	07	TH491		----------	NAD0025-103X	N THERMISTOR	(Addition)	1	01,0A,0B,0C,0D,0E,0F,10,11,12,13,14,15,16,17,18
	07	X351		----------	NAX0741-001X	CRYSTAL	(Addition)	1	01,0A,0B,0C,0D,0E,0F,10,11,12,13,14,15,16,17,18
	07	X354		----------	NAX0927-001X	CRYSTAL	(Addition)	1	01,0A,0B,0C,0D,0E,0F,10,11,12,13,14,15,16,17,18

FMU-XD3-12D Front end board AVX624,625,626 [08]

⚠	Symbol		or	Part No. <Rev.002>	Part No. <Rev.003>	Part Name	Description	Qty	Models
	08	IC1		----------	BD8215EFV-X	IC	(Addition)	1	02,03,04,05,06,07,08,09
	08	IC3		----------	MM3233CF-X	IC	(Addition)	1	02,03,04,05,06,07,08,09
	08	IC301		----------	MN2DS0018MA	IC	(Addition)	1	02,03,04,05,06,07,08,09
	08	IC302		----------	MM1701CH-X	IC	(Addition)	1	02,03,04,05,06,07,08,09
	08	IC398		----------	JVM439B	IC	(Addition)	1	02,03,04,05,06,07,08,09
	08	IC399		----------	V54C3128164VCI7	IC	(Addition)	1	02,03,04,05,06,07,08,09
	08	IC399	or	----------	HY57V281620FTH	IC(DIGITAL)	(Addition)	1	02,03,04,05,06,07,08,09
	08	IC400		----------	AK4387ET-X	IC	(Addition)	1	02,03,04,05,06,07,08,09
	08	IC481		----------	BR24S32FVT-W-X	IC(DIGITAL)	(Addition)	1	02,03,04,05,06,07,08,09
	08	IC501		----------	TC74LCX373FT-X	IC(DIGITAL)	(Addition)	1	02,03,04,05,06,07,08,09
	08	IC502		----------	TC74LCX373FT-X	IC(DIGITAL)	(Addition)	1	02,03,04,05,06,07,08,09
	08	Q2		----------	RT1N141U-X	DIGI TRANSISTOR	(Addition)	1	02,03,04,05,06,07,08,09
	08	Q4		----------	2SC3928A/R/-X	TRANSISTOR	(Addition)	1	02,03,04,05,06,07,08,09
	08	Q4	or	----------	2SD601A/R/-X	TRANSISTOR	(Addition)	1	02,03,04,05,06,07,08,09
	08	Q7		----------	2SC3928A/R/-X	TRANSISTOR	(Addition)	1	02,03,04,05,06,07,08,09
	08	Q7	or	----------	2SD601A/R/-X	TRANSISTOR	(Addition)	1	02,03,04,05,06,07,08,09
	08	Q101		----------	2SB1424/R/-W	TRANSISTOR	(Addition)	1	02,03,04,05,06,07,08,09
	08	Q102		----------	2SC4617/R/-X	TRANSISTOR	(Addition)	1	02,03,04,05,06,07,08,09
	08	Q103		----------	2SB1424/R/-W	TRANSISTOR	(Addition)	1	02,03,04,05,06,07,08,09
	08	Q104		----------	2SC4617/R/-X	TRANSISTOR	(Addition)	1	02,03,04,05,06,07,08,09
	08	Q105		----------	2SC4617/R/-X	TRANSISTOR	(Addition)	1	02,03,04,05,06,07,08,09
	08	Q106		----------	2SK3546J-X	MOS FET	(Addition)	1	02,03,04,05,06,07,08,09
	08	Q107		----------	2SK3546J-X	MOS FET	(Addition)	1	02,03,04,05,06,07,08,09
	08	Q301		----------	RT1N441U-X	DIGI TRANSISTOR	(Addition)	1	02,03,04,05,06,07,08,09
	08	Q302		----------	RT1N441U-X	DIGI TRANSISTOR	(Addition)	1	02,03,04,05,06,07,08,09
	08	D6		----------	AN1102W-6-X	IR LED	(Addition)	1	02,03,04,05,06,07,08,09
	08	D7		----------	AN1102W-6-X	IR LED	(Addition)	1	02,03,04,05,06,07,08,09
	08	D9		----------	PS1192HB-22-X	PHOTO TRANSISTOR	(Addition)	1	02,03,04,05,06,07,08,09
	08	D11		----------	PS1192HB-22-X	PHOTO TRANSISTOR	(Addition)	1	02,03,04,05,06,07,08,09
	08	C2		----------	NCB31CK-104X	C CAPACITOR	(Addition)	1	02,03,04,05,06,07,08,09
	08	C3		----------	NCB31CK-104X	C CAPACITOR	(Addition)	1	02,03,04,05,06,07,08,09
	08	C4		----------	NCB31CK-104X	C CAPACITOR	(Addition)	1	02,03,04,05,06,07,08,09
	08	C5		----------	NCB31CK-104X	C CAPACITOR	(Addition)	1	02,03,04,05,06,07,08,09
	08	C6		----------	NCB31CK-104X	C CAPACITOR	(Addition)	1	02,03,04,05,06,07,08,09
	08	C7		----------	NCB31CK-104X	C CAPACITOR	(Addition)	1	02,03,04,05,06,07,08,09
	08	C8		----------	NCB31CK-104X	C CAPACITOR	(Addition)	1	02,03,04,05,06,07,08,09
	08	C9		----------	NCB31CK-104X	C CAPACITOR	(Addition)	1	02,03,04,05,06,07,08,09
	08	C11		----------	NCB31CK-104X	C CAPACITOR	(Addition)	1	02,03,04,05,06,07,08,09
	08	C12		----------	NCB31CK-104X	C CAPACITOR	(Addition)	1	02,03,04,05,06,07,08,09
	08	C13		----------	NCB31CK-104X	C CAPACITOR	(Addition)	1	02,03,04,05,06,07,08,09
	08	C14		----------	NCB31CK-104X	C CAPACITOR	(Addition)	1	02,03,04,05,06,07,08,09
	08	C15		----------	NCB31CK-104X	C CAPACITOR	(Addition)	1	02,03,04,05,06,07,08,09
	08	C16		----------	NCB31CK-104X	C CAPACITOR	(Addition)	1	02,03,04,05,06,07,08,09
	08	C17		----------	NCB31CK-104X	C CAPACITOR	(Addition)	1	02,03,04,05,06,07,08,09
	08	C18		----------	NCB31CK-104X	C CAPACITOR	(Addition)	1	02,03,04,05,06,07,08,09
	08	C19		----------	NCB31CK-104X	C CAPACITOR	(Addition)	1	02,03,04,05,06,07,08,09
	08	C20		----------	NCB31CK-104X	C CAPACITOR	(Addition)	1	02,03,04,05,06,07,08,09
	08	C21		----------	NBE41AM-226X	TA E CAPACITOR	(Addition)	1	02,03,04,05,06,07,08,09
	08	C22		----------	NBE41AM-476X	TA E CAPACITOR	(Addition)	1	02,03,04,05,06,07,08,09
	08	C23		----------	NBE41AM-476X	TA E CAPACITOR	(Addition)	1	02,03,04,05,06,07,08,09
	08	C24		----------	NCB31CK-104X	C CAPACITOR	(Addition)	1	02,03,04,05,06,07,08,09
	08	C25		----------	NCB31CK-104X	C CAPACITOR	(Addition)	1	02,03,04,05,06,07,08,09
	08	C26		----------	NCB31CK-104X	C CAPACITOR	(Addition)	1	02,03,04,05,06,07,08,09
	08	C31		----------	NCB31HK-681X	C CAPACITOR	(Addition)	1	02,03,04,05,06,07,08,09
	08	C32		----------	NCB31HK-561X	C CAPACITOR	(Addition)	1	02,03,04,05,06,07,08,09
	08	C60		----------	NCB31HK-103X	C CAPACITOR	(Addition)	1	02,03,04,05,06,07,08,09
	08	C63		----------	NBE20JM-226X	TA E CAPACITOR	(Addition)	1	02,03,04,05,06,07,08,09
	08	C65		----------	NCB31CK-104X	C CAPACITOR	(Addition)	1	02,03,04,05,06,07,08,09

⚠	Symbol		or	Part No. <Rev.002>	Part No. <Rev.003>	Part Name	Description	Qty	Models
	08	C66		----------	NCB31CK-104X	C CAPACITOR	(Addition)	1	02,03,04,05,06,07,08,09
	08	C67		----------	NCB31HK-103X	C CAPACITOR	(Addition)	1	02,03,04,05,06,07,08,09
	08	C68		----------	NCB31CK-104X	C CAPACITOR	(Addition)	1	02,03,04,05,06,07,08,09
	08	C69		----------	NCB21CK-105X	C CAPACITOR	(Addition)	1	02,03,04,05,06,07,08,09
	08	C70		----------	NCB31CK-104X	C CAPACITOR	(Addition)	1	02,03,04,05,06,07,08,09
	08	C71		----------	NCB31CK-104X	C CAPACITOR	(Addition)	1	02,03,04,05,06,07,08,09
	08	C72		----------	NCB31CK-105X	C CAPACITOR	(Addition)	1	02,03,04,05,06,07,08,09
	08	C73		----------	NCB31CK-104X	C CAPACITOR	(Addition)	1	02,03,04,05,06,07,08,09
	08	C74		----------	NCB31CK-104X	C CAPACITOR	(Addition)	1	02,03,04,05,06,07,08,09
	08	C75		----------	NCB31CK-104X	C CAPACITOR	(Addition)	1	02,03,04,05,06,07,08,09
	08	C76		----------	NCB31CK-104X	C CAPACITOR	(Addition)	1	02,03,04,05,06,07,08,09
	08	C77		----------	NCB31CK-104X	C CAPACITOR	(Addition)	1	02,03,04,05,06,07,08,09
	08	C78		----------	NCB31CK-104X	C CAPACITOR	(Addition)	1	02,03,04,05,06,07,08,09
	08	C79		----------	NCB31CK-104X	C CAPACITOR	(Addition)	1	02,03,04,05,06,07,08,09
	08	C80		----------	NCB21CK-105X	C CAPACITOR	(Addition)	1	02,03,04,05,06,07,08,09
	08	C81		----------	NDC31HJ-120X	C CAPACITOR	(Addition)	1	02,03,04,05,06,07,08,09
	08	C82		----------	NDC31HJ-150X	C CAPACITOR	(Addition)	1	02,03,04,05,06,07,08,09
	08	C83		----------	NCB31CK-104X	C CAPACITOR	(Addition)	1	02,03,04,05,06,07,08,09
	08	C84		----------	NCB31CK-333X	C CAPACITOR	(Addition)	1	02,03,04,05,06,07,08,09
	08	C85		----------	NCB31CK-104X	C CAPACITOR	(Addition)	1	02,03,04,05,06,07,08,09
	08	C86		----------	NCB31CK-104X	C CAPACITOR	(Addition)	1	02,03,04,05,06,07,08,09
	08	C87		----------	NCB31CK-104X	C CAPACITOR	(Addition)	1	02,03,04,05,06,07,08,09
	08	C88		----------	NCB31CK-104X	C CAPACITOR	(Addition)	1	02,03,04,05,06,07,08,09
	08	C89		----------	NCB31HK-183X	C CAPACITOR	(Addition)	1	02,03,04,05,06,07,08,09
	08	C90		----------	NCB31HK-562X	C CAPACITOR	(Addition)	1	02,03,04,05,06,07,08,09
	08	C91		----------	NCB31CK-104X	C CAPACITOR	(Addition)	1	02,03,04,05,06,07,08,09
	08	C92		----------	NCB21CK-105X	C CAPACITOR	(Addition)	1	02,03,04,05,06,07,08,09
	08	C93		----------	NCB21CK-105X	C CAPACITOR	(Addition)	1	02,03,04,05,06,07,08,09
	08	C99		----------	NCB31CK-104X	C CAPACITOR	(Addition)	1	02,03,04,05,06,07,08,09
	08	C100		----------	NCB31CK-684X	C CAPACITOR	(Addition)	1	02,03,04,05,06,07,08,09
	08	C101		----------	NCB31CK-104X	C CAPACITOR	(Addition)	1	02,03,04,05,06,07,08,09
	08	C102		----------	NCB31CK-684X	C CAPACITOR	(Addition)	1	02,03,04,05,06,07,08,09
	08	C106		----------	NCB31CK-104X	C CAPACITOR	(Addition)	1	02,03,04,05,06,07,08,09
	08	C109		----------	NCB21CK-105X	C CAPACITOR	(Addition)	1	02,03,04,05,06,07,08,09
	08	C113		----------	NCB21CK-105X	C CAPACITOR	(Addition)	1	02,03,04,05,06,07,08,09
	08	C117		----------	NCB21CK-105X	C CAPACITOR	(Addition)	1	02,03,04,05,06,07,08,09
	08	C118		----------	NCB31HK-103X	C CAPACITOR	(Addition)	1	02,03,04,05,06,07,08,09
	08	C121		----------	NCB31CK-104X	C CAPACITOR	(Addition)	1	02,03,04,05,06,07,08,09
	08	C122		----------	NCB31CK-104X	C CAPACITOR	(Addition)	1	02,03,04,05,06,07,08,09
	08	C126		----------	NCB31CK-104X	C CAPACITOR	(Addition)	1	02,03,04,05,06,07,08,09
	08	C127		----------	NCB31CK-104X	C CAPACITOR	(Addition)	1	02,03,04,05,06,07,08,09
	08	C128		----------	NCB31CK-104X	C CAPACITOR	(Addition)	1	02,03,04,05,06,07,08,09
	08	C129		----------	NCB31CK-104X	C CAPACITOR	(Addition)	1	02,03,04,05,06,07,08,09
	08	C130		----------	NCB31CK-104X	C CAPACITOR	(Addition)	1	02,03,04,05,06,07,08,09
	08	C131		----------	NCB31CK-104X	C CAPACITOR	(Addition)	1	02,03,04,05,06,07,08,09
	08	C132		----------	NCB31CK-104X	C CAPACITOR	(Addition)	1	02,03,04,05,06,07,08,09
	08	C133		----------	NCB31CK-104X	C CAPACITOR	(Addition)	1	02,03,04,05,06,07,08,09
	08	C134		----------	NCB31CK-104X	C CAPACITOR	(Addition)	1	02,03,04,05,06,07,08,09
	08	C135		----------	NCB31CK-104X	C CAPACITOR	(Addition)	1	02,03,04,05,06,07,08,09
	08	C136		----------	NCB31CK-104X	C CAPACITOR	(Addition)	1	02,03,04,05,06,07,08,09
	08	C137		----------	NBE20JM-226X	TA E CAPACITOR	(Addition)	1	02,03,04,05,06,07,08,09
	08	C139		----------	NBE20JM-226X	TA E CAPACITOR	(Addition)	1	02,03,04,05,06,07,08,09
	08	C142		----------	NCB31CK-104X	C CAPACITOR	(Addition)	1	02,03,04,05,06,07,08,09
	08	C143		----------	NBE20JM-226X	TA E CAPACITOR	(Addition)	1	02,03,04,05,06,07,08,09
	08	C145		----------	NBE41AM-476X	TA E CAPACITOR	(Addition)	1	02,03,04,05,06,07,08,09
	08	C148		----------	NCB31HK-331X	C CAPACITOR	(Addition)	1	02,03,04,05,06,07,08,09
	08	C149		----------	NCB31CK-104X	C CAPACITOR	(Addition)	1	02,03,04,05,06,07,08,09
	08	C151		----------	NCB31CK-473X	C CAPACITOR	(Addition)	1	02,03,04,05,06,07,08,09
	08	C155		----------	NDC31HJ-101X	C CAPACITOR	(Addition)	1	02,03,04,05,06,07,08,09
	08	C156		----------	NCB31CK-104X	C CAPACITOR	(Addition)	1	02,03,04,05,06,07,08,09
	08	C161		----------	NCB31CK-104X	C CAPACITOR	(Addition)	1	02,03,04,05,06,07,08,09
	08	C162		----------	NCB31CK-104X	C CAPACITOR	(Addition)	1	02,03,04,05,06,07,08,09
	08	C164		----------	NCB21CK-105X	C CAPACITOR	(Addition)	1	02,03,04,05,06,07,08,09
	08	C167		----------	NDC31HJ-272X	C CAPACITOR	(Addition)	1	02,03,04,05,06,07,08,09
	08	C170		----------	NCB31CK-104X	C CAPACITOR	(Addition)	1	02,03,04,05,06,07,08,09
	08	C173		----------	NCB31CK-104X	C CAPACITOR	(Addition)	1	02,03,04,05,06,07,08,09
	08	C174		----------	NCB31CK-104X	C CAPACITOR	(Addition)	1	02,03,04,05,06,07,08,09
	08	C175		----------	NBE51CM-476X	TA E CAPACITOR	(Addition)	1	02,03,04,05,06,07,08,09

⚠	Symbol		or	Part No. <Rev.002>	Part No. <Rev.003>	Part Name	Description	Qty	Models
	08	C176		----------	NCB31CK-104X	C CAPACITOR	(Addition)	1	02,03,04,05,06,07,08,09
	08	C177		----------	NCB31CK-104X	C CAPACITOR	(Addition)	1	02,03,04,05,06,07,08,09
	08	C178		----------	NCB31CK-104X	C CAPACITOR	(Addition)	1	02,03,04,05,06,07,08,09
	08	C197		----------	NCB31CK-104X	C CAPACITOR	(Addition)	1	02,03,04,05,06,07,08,09
	08	C199		----------	NCB31CK-104X	C CAPACITOR	(Addition)	1	02,03,04,05,06,07,08,09
	08	C200		----------	NBE40JM-476X	TA E CAPACITOR	(Addition)	1	02,03,04,05,06,07,08,09
	08	C201		----------	NCB31CK-104X	C CAPACITOR	(Addition)	1	02,03,04,05,06,07,08,09
	08	C205		----------	NCB21AK-225X	C CAPACITOR	(Addition)	1	02,03,04,05,06,07,08,09
	08	C206		----------	NDC31HJ-222X	C CAPACITOR	(Addition)	1	02,03,04,05,06,07,08,09
	08	C211		----------	NCB31CK-104X	C CAPACITOR	(Addition)	1	02,03,04,05,06,07,08,09
	08	C215		----------	NDC31HJ-181X	C CAPACITOR	(Addition)	1	02,03,04,05,06,07,08,09
	08	C216		----------	NCB31CK-104X	C CAPACITOR	(Addition)	1	02,03,04,05,06,07,08,09
	08	C218		----------	NCB31CK-104X	C CAPACITOR	(Addition)	1	02,03,04,05,06,07,08,09
	08	C219		----------	NCB31CK-223X	C CAPACITOR	(Addition)	1	02,03,04,05,06,07,08,09
	08	C220		----------	NCB31HK-102X	C CAPACITOR	(Addition)	1	02,03,04,05,06,07,08,09
	08	C222		----------	NCB31CK-104X	C CAPACITOR	(Addition)	1	02,03,04,05,06,07,08,09
	08	C223		----------	NCB31HK-102X	C CAPACITOR	(Addition)	1	02,03,04,05,06,07,08,09
	08	C224		----------	NCB21AK-225X	C CAPACITOR	(Addition)	1	02,03,04,05,06,07,08,09
	08	C225		----------	NBE51CM-476X	TA E CAPACITOR	(Addition)	1	02,03,04,05,06,07,08,09
	08	C228		----------	NCB31HK-102X	C CAPACITOR	(Addition)	1	02,03,04,05,06,07,08,09
	08	C229		----------	NCB31CK-223X	C CAPACITOR	(Addition)	1	02,03,04,05,06,07,08,09
	08	C232		----------	NBE51CM-476X	TA E CAPACITOR	(Addition)	1	02,03,04,05,06,07,08,09
	08	C233		----------	NCB21CK-105X	C CAPACITOR	(Addition)	1	02,03,04,05,06,07,08,09
	08	C235		----------	NCB31HK-102X	C CAPACITOR	(Addition)	1	02,03,04,05,06,07,08,09
	08	C237		----------	NDC31HJ-221X	C CAPACITOR	(Addition)	1	02,03,04,05,06,07,08,09
	08	C238		----------	NCB31CK-104X	C CAPACITOR	(Addition)	1	02,03,04,05,06,07,08,09
	08	C240		----------	NCB31CK-104X	C CAPACITOR	(Addition)	1	02,03,04,05,06,07,08,09
	08	C241		----------	NCB31CK-104X	C CAPACITOR	(Addition)	1	02,03,04,05,06,07,08,09
	08	R46		----------	NRSA6AD-103W	MG RESISTOR	(Addition)	1	02,03,04,05,06,07,08,09
	08	R47		----------	NRSA6AD-103W	MG RESISTOR	(Addition)	1	02,03,04,05,06,07,08,09
	08	R49		----------	NRSA63J-0R0X	MG RESISTOR	(Addition)	1	02,03,04,05,06,07,08,09
	08	R52		----------	NRSA6AD-103W	MG RESISTOR	(Addition)	1	02,03,04,05,06,07,08,09
	08	R54		----------	NRSA6AD-910W	MG RESISTOR	(Addition)	1	02,03,04,05,06,07,08,09
	08	R55		----------	NRSA6AD-910W	MG RESISTOR	(Addition)	1	02,03,04,05,06,07,08,09
	08	R56		----------	NRSA63D-432X	MG RESISTOR	(Addition)	1	02,03,04,05,06,07,08,09
	08	R57		----------	NRSA63D-242X	MG RESISTOR	(Addition)	1	02,03,04,05,06,07,08,09
	08	R58		----------	NRS125J-390X	MG RESISTOR	(Addition)	1	02,03,04,05,06,07,08,09
	08	R59		----------	NRSA63J-2R2X	MG RESISTOR	(Addition)	1	02,03,04,05,06,07,08,09
	08	R60		----------	NRSA6AD-102W	MG RESISTOR	(Addition)	1	02,03,04,05,06,07,08,09
	08	R61		----------	NRSA6AD-471W	MG RESISTOR	(Addition)	1	02,03,04,05,06,07,08,09
	08	R62		----------	NRSA6AD-471W	MG RESISTOR	(Addition)	1	02,03,04,05,06,07,08,09
	08	R64		----------	NRSA63D-432X	MG RESISTOR	(Addition)	1	02,03,04,05,06,07,08,09
	08	R65		----------	NRSA63D-242X	MG RESISTOR	(Addition)	1	02,03,04,05,06,07,08,09
	08	R66		----------	NRS125J-120X	MG RESISTOR	(Addition)	1	02,03,04,05,06,07,08,09
	08	R67		----------	NRSA63J-2R2X	MG RESISTOR	(Addition)	1	02,03,04,05,06,07,08,09
	08	R68		----------	NRSA6AD-102W	MG RESISTOR	(Addition)	1	02,03,04,05,06,07,08,09
	08	R69		----------	NRSA63J-471X	MG RESISTOR	(Addition)	1	02,03,04,05,06,07,08,09
	08	R70		----------	NRSA6AD-331W	MG RESISTOR	(Addition)	1	02,03,04,05,06,07,08,09
	08	R79		----------	NRSA6AD-104W	MG RESISTOR	(Addition)	1	02,03,04,05,06,07,08,09
	08	R92		----------	NRSA63J-473X	MG RESISTOR	(Addition)	1	02,03,04,05,06,07,08,09
	08	R93		----------	NRSA63J-203X	MG RESISTOR	(Addition)	1	02,03,04,05,06,07,08,09
	08	R94		----------	NRSA63J-223X	MG RESISTOR	(Addition)	1	02,03,04,05,06,07,08,09
	08	R99		----------	NRSA63J-0R0X	MG RESISTOR	(Addition)	1	02,03,04,05,06,07,08,09
	08	R100		----------	NRSA6AD-103W	MG RESISTOR	(Addition)	1	02,03,04,05,06,07,08,09
	08	R107		----------	NRSA63J-152X	MG RESISTOR	(Addition)	1	02,03,04,05,06,07,08,09
	08	R112		----------	NRSA63J-223X	MG RESISTOR	(Addition)	1	02,03,04,05,06,07,08,09
	08	R117		----------	NRSA6AD-103W	MG RESISTOR	(Addition)	1	02,03,04,05,06,07,08,09
	08	R120		----------	NRSA63J-152X	MG RESISTOR	(Addition)	1	02,03,04,05,06,07,08,09
	08	R122		----------	NRSA6AD-103W	MG RESISTOR	(Addition)	1	02,03,04,05,06,07,08,09
	08	R128		----------	NRSA6AD-270W	MG RESISTOR	(Addition)	1	02,03,04,05,06,07,08,09
	08	R129		----------	NRSA6AD-103W	MG RESISTOR	(Addition)	1	02,03,04,05,06,07,08,09
	08	R131		----------	NRSA6AD-102W	MG RESISTOR	(Addition)	1	02,03,04,05,06,07,08,09
	08	R132		----------	NRSA6AD-102W	MG RESISTOR	(Addition)	1	02,03,04,05,06,07,08,09
	08	R133		----------	NRSA6AD-223W	MG RESISTOR	(Addition)	1	02,03,04,05,06,07,08,09
	08	R134		----------	NRSA6AD-104W	MG RESISTOR	(Addition)	1	02,03,04,05,06,07,08,09
	08	R137		----------	NRSA63J-0R0X	MG RESISTOR	(Addition)	1	02,03,04,05,06,07,08,09
	08	R139		----------	NRSA63J-0R0X	MG RESISTOR	(Addition)	1	02,03,04,05,06,07,08,09
	08	R141		----------	NRSA63D-332X	MG RESISTOR	(Addition)	1	02,03,04,05,06,07,08,09

⚠	Symbol		or	Part No. <Rev.002>	Part No. <Rev.003>	Part Name	Description	Qty	Models
	08	R142		----------	NRSA63J-0R0X	MG RESISTOR	(Addition)	1	02,03,04,05,06,07,08,09
	08	R143		----------	NRSA6AD-101W	MG RESISTOR	(Addition)	1	02,03,04,05,06,07,08,09
	08	R144		----------	NRSA6AD-103W	MG RESISTOR	(Addition)	1	02,03,04,05,06,07,08,09
	08	R145		----------	NRSA6AD-103W	MG RESISTOR	(Addition)	1	02,03,04,05,06,07,08,09
	08	R152		----------	NRSA63J-0R0X	MG RESISTOR	(Addition)	1	02,03,04,05,06,07,08,09
	08	R153		----------	NRSA63D-162X	MG RESISTOR	(Addition)	1	02,03,04,05,06,07,08,09
	08	R155		----------	NRSA63J-0R0X	MG RESISTOR	(Addition)	1	02,03,04,05,06,07,08,09
	08	R156		----------	NRSA63J-0R0X	MG RESISTOR	(Addition)	1	02,03,04,05,06,07,08,09
	08	R160		----------	NRSA63D-303X	MG RESISTOR	(Addition)	1	02,03,04,05,06,07,08,09
	08	R163		----------	NRSA6AD-103W	MG RESISTOR	(Addition)	1	02,03,04,05,06,07,08,09
	08	R164		----------	NRSA63J-181X	MG RESISTOR	(Addition)	1	02,03,04,05,06,07,08,09
	08	R165		----------	NRSA6AD-473W	MG RESISTOR	(Addition)	1	02,03,04,05,06,07,08,09
	08	R166		----------	NRSA6AD-473W	MG RESISTOR	(Addition)	1	02,03,04,05,06,07,08,09
	08	R167		----------	NRSA6AD-473W	MG RESISTOR	(Addition)	1	02,03,04,05,06,07,08,09
	08	R168		----------	NRSA6AD-473W	MG RESISTOR	(Addition)	1	02,03,04,05,06,07,08,09
	08	R170		----------	NRSA6AD-471W	MG RESISTOR	(Addition)	1	02,03,04,05,06,07,08,09
	08	R171		----------	NRSA63J-105X	MG RESISTOR	(Addition)	1	02,03,04,05,06,07,08,09
	08	R172		----------	NRSA6AD-101W	MG RESISTOR	(Addition)	1	02,03,04,05,06,07,08,09
	08	R173		----------	NRSA6AD-101W	MG RESISTOR	(Addition)	1	02,03,04,05,06,07,08,09
	08	R174		----------	NRSA6AD-101W	MG RESISTOR	(Addition)	1	02,03,04,05,06,07,08,09
	08	R177		----------	NRSA63J-0R0X	MG RESISTOR	(Addition)	1	02,03,04,05,06,07,08,09
	08	R178		----------	NRSA63J-0R0X	MG RESISTOR	(Addition)	1	02,03,04,05,06,07,08,09
	08	R181		----------	NQR0129-002X	FERRITE BEADS	(Addition)	1	02,03,04,05,06,07,08,09
	08	R189		----------	NRSA6AD-331W	MG RESISTOR	(Addition)	1	02,03,04,05,06,07,08,09
	08	R190		----------	NRSA6AD-331W	MG RESISTOR	(Addition)	1	02,03,04,05,06,07,08,09
	08	R195		----------	NRSA6AD-102W	MG RESISTOR	(Addition)	1	02,03,04,05,06,07,08,09
	08	R211		----------	NRSA6AD-473W	MG RESISTOR	(Addition)	1	02,03,04,05,06,07,08,09
	08	R213		----------	NRSA63J-100X	MG RESISTOR	(Addition)	1	02,03,04,05,06,07,08,09
	08	R215		----------	NRSA63D-122X	MG RESISTOR	(Addition)	1	02,03,04,05,06,07,08,09
	08	R216		----------	NRSA63D-122X	MG RESISTOR	(Addition)	1	02,03,04,05,06,07,08,09
	08	R217		----------	NRSA6AD-100W	MG RESISTOR	(Addition)	1	02,03,04,05,06,07,08,09
	08	R219		----------	NRSA63J-150X	MG RESISTOR	(Addition)	1	02,03,04,05,06,07,08,09
	08	R220		----------	NRSA63J-0R0X	MG RESISTOR	(Addition)	1	02,03,04,05,06,07,08,09
	08	R226		----------	NRSA6AD-473W	MG RESISTOR	(Addition)	1	02,03,04,05,06,07,08,09
	08	R229		----------	NRSA63J-0R0X	MG RESISTOR	(Addition)	1	02,03,04,05,06,07,08,09
	08	R233		----------	NRSA6AD-103W	MG RESISTOR	(Addition)	1	02,03,04,05,06,07,08,09
	08	R264		----------	NRSA63J-0R0X	MG RESISTOR	(Addition)	1	02,03,04,05,06,07,08,09
	08	R265		----------	NRSA6AD-103W	MG RESISTOR	(Addition)	1	02,03,04,05,06,07,08,09
	08	R267		----------	NRSA63D-472X	MG RESISTOR	(Addition)	1	02,03,04,05,06,07,08,09
	08	R268		----------	NRSA63J-0R0X	MG RESISTOR	(Addition)	1	02,03,04,05,06,07,08,09
	08	R309		----------	NRS125J-R47X	MG RESISTOR	(Addition)	1	02,03,04,05,06,07,08,09
	08	R310		----------	NRSA6AD-333W	MG RESISTOR	(Addition)	1	02,03,04,05,06,07,08,09
	08	R311		----------	NRSA63J-391X	MG RESISTOR	(Addition)	1	02,03,04,05,06,07,08,09
	08	R318		----------	NRSA63J-203X	MG RESISTOR	(Addition)	1	02,03,04,05,06,07,08,09
	08	R319		----------	NRSA6AD-622W	MG RESISTOR	(Addition)	1	02,03,04,05,06,07,08,09
	08	R323		----------	NRSA6AD-391W	MG RESISTOR	(Addition)	1	02,03,04,05,06,07,08,09
	08	R324		----------	NRSA63D-682X	MG RESISTOR	(Addition)	1	02,03,04,05,06,07,08,09
	08	R325		----------	NRSA63D-753X	MG RESISTOR	(Addition)	1	02,03,04,05,06,07,08,09
	08	R329		----------	NRS125J-R47X	MG RESISTOR	(Addition)	1	02,03,04,05,06,07,08,09
	08	R330		----------	NRSA63J-0R0X	MG RESISTOR	(Addition)	1	02,03,04,05,06,07,08,09
	08	R352		----------	NRSA6AD-102W	MG RESISTOR	(Addition)	1	02,03,04,05,06,07,08,09
	08	R357		----------	NRS125J-R22X	MG RESISTOR	(Addition)	1	02,03,04,05,06,07,08,09
	08	R359		----------	NRSA6AD-243W	MG RESISTOR	(Addition)	1	02,03,04,05,06,07,08,09
	08	R362		----------	NRSA63J-103X	MG RESISTOR	(Addition)	1	02,03,04,05,06,07,08,09
	08	R364		----------	NRSA63J-391X	MG RESISTOR	(Addition)	1	02,03,04,05,06,07,08,09
	08	R365		----------	NRSA6AD-103W	MG RESISTOR	(Addition)	1	02,03,04,05,06,07,08,09
	08	R366		----------	NRS125J-R22X	MG RESISTOR	(Addition)	1	02,03,04,05,06,07,08,09
	08	R367		----------	NRSA6AD-104W	MG RESISTOR	(Addition)	1	02,03,04,05,06,07,08,09
	08	R369		----------	NRS125J-R22X	MG RESISTOR	(Addition)	1	02,03,04,05,06,07,08,09
	08	R371		----------	NRSA63J-0R0X	MG RESISTOR	(Addition)	1	02,03,04,05,06,07,08,09
	08	R375		----------	NRSA6AD-152W	MG RESISTOR	(Addition)	1	02,03,04,05,06,07,08,09
	08	R376		----------	NRSA6AD-822W	MG RESISTOR	(Addition)	1	02,03,04,05,06,07,08,09
	08	R379		----------	NRSA63D-332X	MG RESISTOR	(Addition)	1	02,03,04,05,06,07,08,09
	08	R380		----------	NRSA63J-223X	MG RESISTOR	(Addition)	1	02,03,04,05,06,07,08,09
	08	R382		----------	NRSA6AD-102W	MG RESISTOR	(Addition)	1	02,03,04,05,06,07,08,09
	08	R383		----------	NRSA63J-223X	MG RESISTOR	(Addition)	1	02,03,04,05,06,07,08,09
	08	R384		----------	NRSA6AD-104W	MG RESISTOR	(Addition)	1	02,03,04,05,06,07,08,09
	08	R386		----------	NRSA6AD-184W	MG RESISTOR	(Addition)	1	02,03,04,05,06,07,08,09

⚠	Symbol		or	Part No. <Rev.002>	Part No. <Rev.003>	Part Name	Description	Qty	Models
	08	R387		----------	NRSA63D-473X	MG RESISTOR	(Addition)	1	02,03,04,05,06,07,08,09
	08	R391		----------	NRSA6AD-822W	MG RESISTOR	(Addition)	1	02,03,04,05,06,07,08,09
	08	R392		----------	NRSA63J-103X	MG RESISTOR	(Addition)	1	02,03,04,05,06,07,08,09
	08	R393		----------	NRSA6AD-103W	MG RESISTOR	(Addition)	1	02,03,04,05,06,07,08,09
	08	R394		----------	NRSA63J-273X	MG RESISTOR	(Addition)	1	02,03,04,05,06,07,08,09
	08	R397		----------	NRSA6AD-101W	MG RESISTOR	(Addition)	1	02,03,04,05,06,07,08,09
	08	R400		----------	NRSA6AD-153W	MG RESISTOR	(Addition)	1	02,03,04,05,06,07,08,09
	08	R402		----------	NRSA6AD-473W	MG RESISTOR	(Addition)	1	02,03,04,05,06,07,08,09
	08	R403		----------	NRSA63J-101X	MG RESISTOR	(Addition)	1	02,03,04,05,06,07,08,09
	08	R406		----------	NRS125J-R22X	MG RESISTOR	(Addition)	1	02,03,04,05,06,07,08,09
	08	R417		----------	NRSA63J-183X	MG RESISTOR	(Addition)	1	02,03,04,05,06,07,08,09
	08	R419		----------	NRSA63D-104X	MG RESISTOR	(Addition)	1	02,03,04,05,06,07,08,09
	08	R420		----------	NRSA6AD-184W	MG RESISTOR	(Addition)	1	02,03,04,05,06,07,08,09
	08	L302		----------	NQLJ6GK-100X	COIL	(Addition)	1	02,03,04,05,06,07,08,09
	08	L303		----------	NRSA02J-0R0X	MG RESISTOR	(Addition)	1	02,03,04,05,06,07,08,09
	08	CN1		----------	QGF0523F3-20W	CONNECTOR	(Addition)	1	02,03,04,05,06,07,08,09
	08	CN2		----------	QGA1002F1-03X	CONNECTOR	(Addition)	1	02,03,04,05,06,07,08,09
	08	CN101		----------	QGF0522F2-26W	CONNECTOR	(Addition)	1	02,03,04,05,06,07,08,09
	08	CN403		----------	QGF0534F3-50X	CONNECTOR	(Addition)	1	02,03,04,05,06,07,08,09
	08	K101		----------	NQR0007-002X	FERRITE BEADS	(Addition)	1	02,03,04,05,06,07,08,09
	08	K102		----------	NQR0007-002X	FERRITE BEADS	(Addition)	1	02,03,04,05,06,07,08,09
	08	K103		----------	NQR0502-001X	FERRITE BEADS	(Addition)	1	02,03,04,05,06,07,08,09
	08	K108		----------	NQR0129-002X	FERRITE BEADS	(Addition)	1	02,03,04,05,06,07,08,09
	08	K113		----------	NQR0502-001X	FERRITE BEADS	(Addition)	1	02,03,04,05,06,07,08,09
	08	K114		----------	NRSA63J-0R0X	MG RESISTOR	(Addition)	1	02,03,04,05,06,07,08,09
	08	K115		----------	NRSA63J-0R0X	MG RESISTOR	(Addition)	1	02,03,04,05,06,07,08,09
	08	K117		----------	NRSA63J-0R0X	MG RESISTOR	(Addition)	1	02,03,04,05,06,07,08,09
	08	K118		----------	NRSA63J-0R0X	MG RESISTOR	(Addition)	1	02,03,04,05,06,07,08,09
	08	K119		----------	NRSA63J-0R0X	MG RESISTOR	(Addition)	1	02,03,04,05,06,07,08,09
	08	K120		----------	NRSA63J-0R0X	MG RESISTOR	(Addition)	1	02,03,04,05,06,07,08,09
	08	K121		----------	NRSA63J-0R0X	MG RESISTOR	(Addition)	1	02,03,04,05,06,07,08,09
	08	K131		----------	NQR0022-005X	FERRITE BEADS	(Addition)	1	02,03,04,05,06,07,08,09
	08	K132		----------	NQR0022-005X	FERRITE BEADS	(Addition)	1	02,03,04,05,06,07,08,09
	08	K133		----------	NQR0022-005X	FERRITE BEADS	(Addition)	1	02,03,04,05,06,07,08,09
	08	K135		----------	NQR0022-005X	FERRITE BEADS	(Addition)	1	02,03,04,05,06,07,08,09
	08	K136		----------	NQR0022-005X	FERRITE BEADS	(Addition)	1	02,03,04,05,06,07,08,09
	08	K137		----------	NRSA63J-0R0X	MG RESISTOR	(Addition)	1	02,03,04,05,06,07,08,09
	08	K141		----------	NRSA63J-0R0X	MG RESISTOR	(Addition)	1	02,03,04,05,06,07,08,09
	08	K142		----------	NRSA63J-0R0X	MG RESISTOR	(Addition)	1	02,03,04,05,06,07,08,09
	08	S1		----------	NSW0313-001X	DETECT SWITCH	(Addition)	1	02,03,04,05,06,07,08,09
	08	TH491		----------	NAD0025-103X	N THERMISTOR	(Addition)	1	02,03,04,05,06,07,08,09
	08	X351		----------	NAX0741-001X	CRYSTAL	(Addition)	1	02,03,04,05,06,07,08,09

Packing and accessories [M3MM]

⚠	Symbol		or	Part No. <Rev.002>	Part No. <Rev.003>	Part Name	Description	Qty	Models
	M3MM	A10		----------	QYSDSP5008ZA	SCREW	(Addition)	4	18
⚠	M3MM	A15		----------	QAM1104-003	CAR CABLE	(Addition)	1	18
⚠	M3MM	A15		QAM1180-001	QAM1180-001	POWER CORD		1	01,02,03,04,06,07,09,0A,0D,0E,0F,10,12,13,14,16,17
⚠	M3MM	A15		QAM1181-001	QAM1181-001	POWER CORD		1	05,08,0B,0C,11,15
	M3MM	A23		VND3046-001	----------	SERIAL TICKET	(Deletion)	1	0B,0C
	M3MM	KIT		----------	SRW-MA443-3	SCREW PARTS KIT	(Addition)	1	18
	M3MM	KIT		----------	SRW-MA393	SCREW PARTS KIT	(Addition)	1	01,02,03,04,05,06,07,08,09,0A,0B,0C,0D,0E,0F,10,11,12,13,14,15,16,17
	M3MM	P1		----------	LV38595-001A	CARTON	(Addition)	1	18
	M3MM	P5		----------	GE10230-001A	CUSHION TOP	(Addition)	1	18
	M3MM	P6		----------	GE10231-001A	CUSHION BOTTOM	(Addition)	1	18
	M3MM	P7		----------	FSPG4002-001	POLY BAG	(Addition)	1	01,02,03,04,05,06,07,08,09,0A,0D,0E,0F,10,11,12,13,14,16,17
	M3MM	P7		QPC01603015	----------	POLY BAG	(Deletion)	1	01,0A,0B,0C
	M3MM	P7		FSPG4002-001	----------	POLY BAG	(Deletion)	1	02,03,04,05,06,07,08,09,0D,0E,0F,10,11,12,13,14,16,17
	M3MM	P7		----------	QPC01603015	POLY BAG	(Addition)	1	0B,0C,15
	M3MM	P7		QPC01603015	----------	POLY BAG	(Deletion)	1	15

Victor Company of Japan, Limited
Mobile Entertainment Division 10-1,1chome,Ohwatari-machi,Maebashi-city,371-8543,Japan

(MA443-R003)

Printed in Japan

VSE

PARTS LIST

KW-ADV792J,KW-AVX624UI,KW-AVX625U
KW-AVX625UT,KW-AVX625EU,KW-AVX626U
KW-AVX626UT,KW-AVX626EU,KW-AVX626A
KW-AVX720J,KW-AVX720E,KW-AVX720EE
KW-AVX724UI,KW-AVX725U,KW-AVX725UN
KW-AVX725UT,KW-AVX725EU,KW-AVX726U
KW-AVX726UN,KW-AVX726UT,KW-AVX726EU
KW-AVX726A,KW-AVX728UF

* All printed circuit boards and its assemblies are not available as service parts.

- Contents -

Exploded view of general assembly and parts list (Block No.M1) ---------- 3- 2
DVD mechanism assembly and parts list (Block No.MJ) ---------- 3- 7
DVD mechanism assembly and parts list (Block No.MU) ---------- 3- 9
Electrical parts list (Block No.01~04) ---------- 3-11
Packing materials and accessories parts list (Block No.M3) ---------- 3-32

Exploded view of general assembly and parts list

Block No. M 1 M M

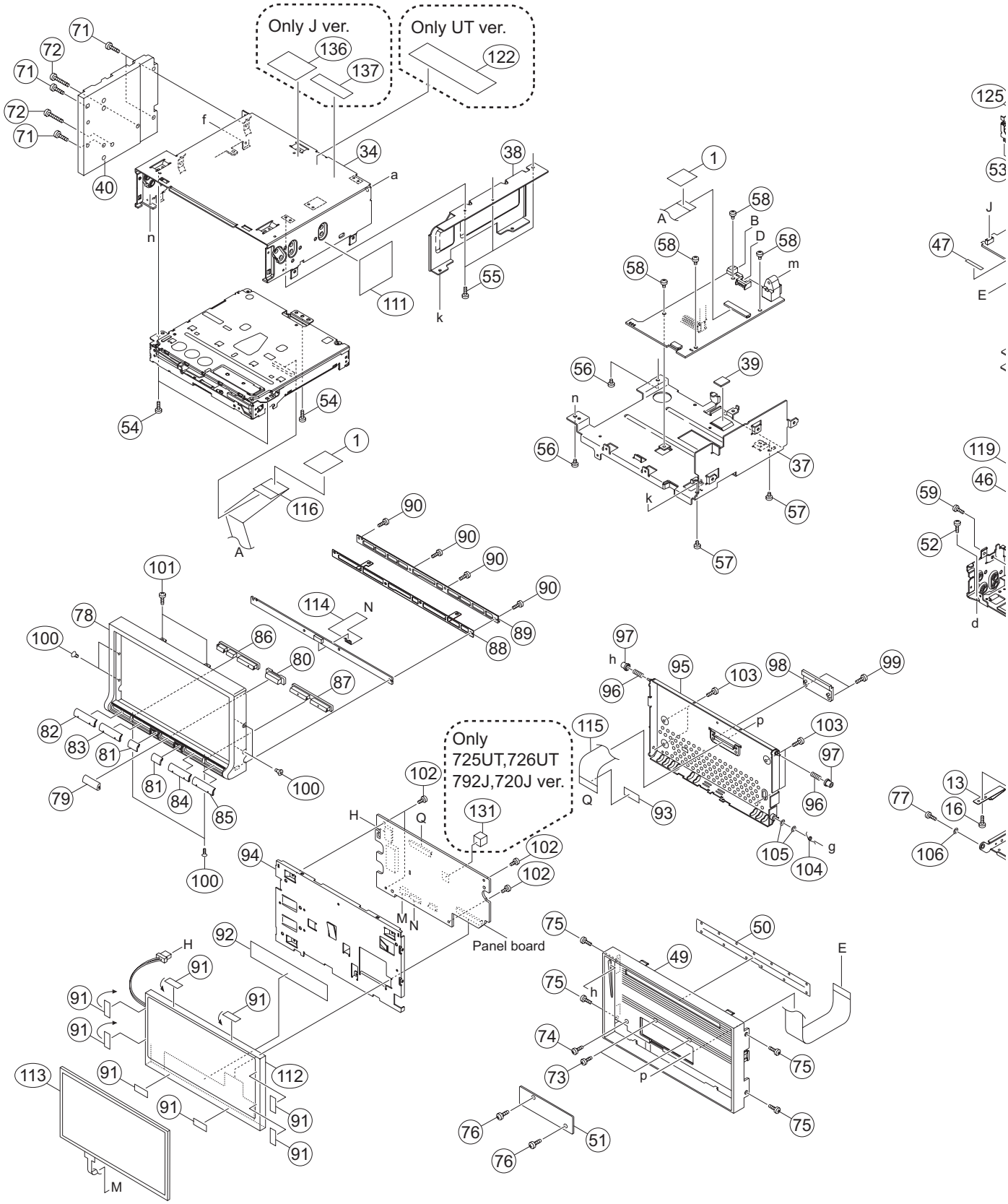

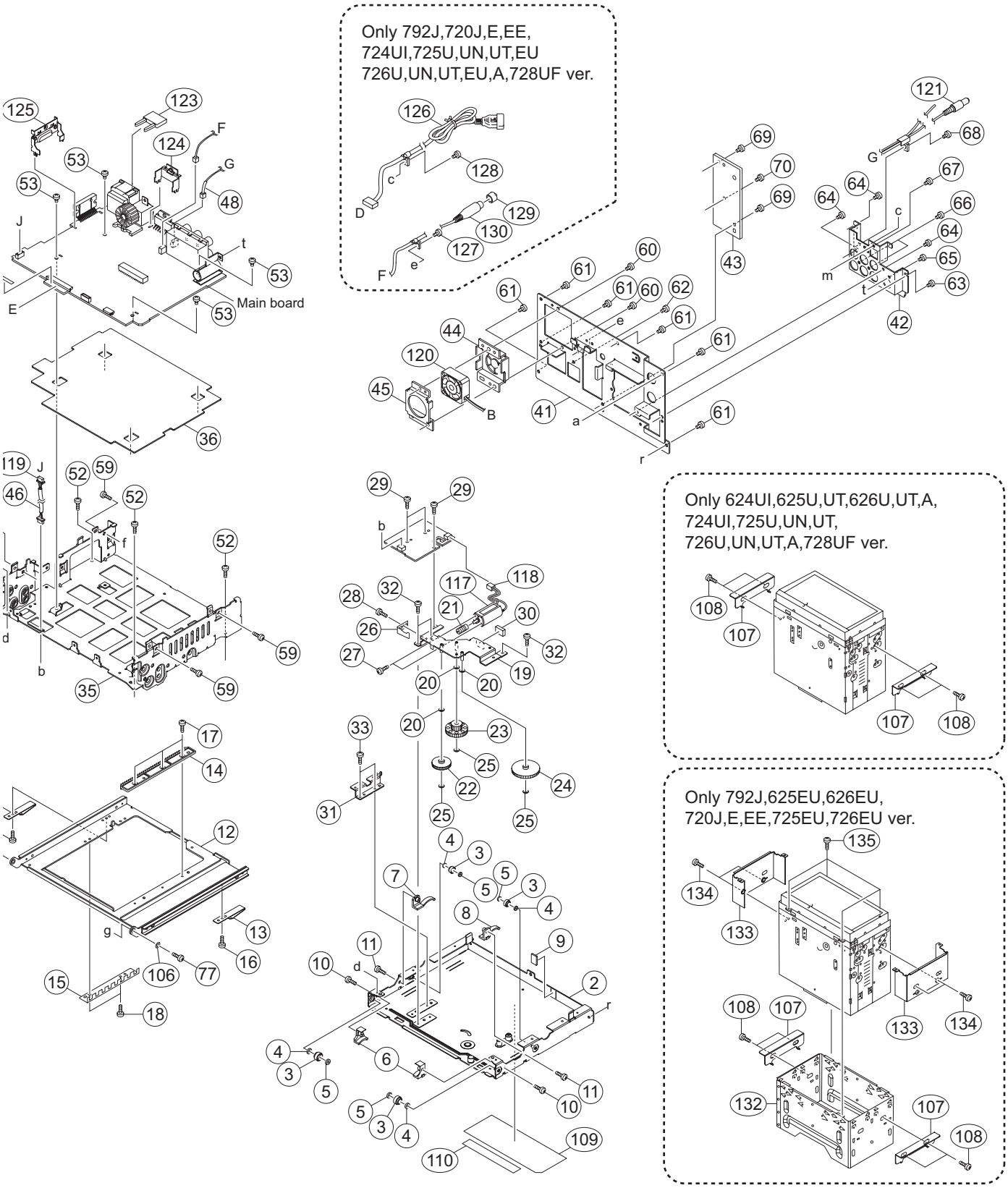

The parts without symbol number are not service.

General Assembly

Block No. [M][1][M][M]

⚠	Symbol No.	Part No.	Part Name	Description	Local
	1	GE40278-003A	SHEET	(x2)	
	2	LV22458-002A	B CHASSIS ASSY		
	3	LV44666-003A	ROLLER(SLD)	(x4)	
	4	QYWFM315013	WASHER	5mm/3.1mm x 0.13mm(x4)	
	5	QYWDL164035	SLIT WASHER	4mm/1.6mm x 0.35mm(x4)	
	6	LV36940-002A	RAIL GUIDE	(x2)	
	7	LV37308-001A	GUIDE SPRING(L)		
	8	LV37309-001A	GUIDE SPRING(R)		
	9	LV40846-053A	SPACER(F)		
	10	QYSPSFT1745ZA	TAP SCREW	M1.7 x 4.5mm(x2)	
	11	QYSPSFT1745ZA	TAP SCREW	M1.7 x 4.5mm(x2)	
	12	LV36514-010A	DRIVE PLATE ASS		
	13	LV44453-004A	FRICTION SPRING	(x2)	
	14	LV36516-001A	RACK GEAR		
	15	LV36517-003A	PHOTO PLATE		
	16	LV44159-004A	MINI SCREW	(x2)	
	17	LV44159-004A	MINI SCREW	(x3)	
	18	LV44159-004A	MINI SCREW	(x2)	
	19	LV36509-002A	D.CHASSIS ASSY		
	20	QYWFM265013	WASHER	5mm/2.6mm x 0.13mm(x3)	
	21	LV44451-001A	WORM GEAR		
	22	LV36511-001A	SECOND GEAR		
	23	LV36512-001A	THIRD GEAR		
	24	LV36513-001A	FORTH GEAR		
	25	QYWDM215025	SLIT WASHER	5mm/2.1mm x 0.25mm(x3)	
	26	LV44452-001A	SPRING(WORM)		
	27	QYSPSPT2020ZA	SCREW	M2 x 2mm(x2)	
	28	LV44159-004A	MINI SCREW		
	29	LV44615-001A	SCREW	(x3)	
	30	LV40846-057A	SPACER(F)		
	31	LV36545-001A	PCB BKT		
	32	LV44159-004A	MINI SCREW	(x3)	
	33	LV44159-004A	MINI SCREW	(x2)	
	34	LV11354-003A	TOP CHASSIS		
	35	LV11353-003A	MID CHASSIS		
	36	LV37864-002A	INSULATOR		
	37	GE20259-001A	SUB BOARD BKT		
	38	GE20260-001A	SUPPORT BKT		
	39	GE40320-003A	COOLING RUBBER		
	40	LV37304-006A	SIDE HEAT SINK		
	41	GE20261-002A	REAR BRACKET(A)		
	42	GE33542-001A	REAR BRACKET(B)		792J,720J,720E,720EE,724UI,725U,725UN,725UT,725EU,726U,726UN, 726UT,726EU,726A,728UF
	42	GE33542-002A	REAR BRACKET(B)		624UI,625U,625UT,625EU,626U,626UT,626EU,626A
	43	GE33544-001A	REAR HEAT SINK		
	44	LV37313-001A	FAN BKT(IN)		
	45	LV37314-002A	FAN BKT(OUT)		
	46	LV40847-016A	SPACER(H)		
	47	GE40466-001A	SPACER		
	48	LV40847-045A	SPACER(H)		
	49	GE33548-002A	F.CHASSIS ASSY		792J,720J
	49	GE33548-001A	F.CHASSIS ASSY		624UI,625U,625UT,625EU,626U,626UT,626EU,626A,720E,720EE,724UI, 725U,725UN,725UT,725EU,726U,726UN,726UT,726EU,726A,728UF
	50	LV45134-002A	BLIND		
	51	GE33541-001A	FPC GUIDE		
	52	LV44615-001A	SCREW	(x4)	
	53	LV41200-004A	SPECIAL SCREW	(x4)	
	54	QYSDST2604ZA	TAP SCREW	M2.6 x 4mm(x3)	
	55	LV44159-004A	MINI SCREW	(x3)	
	56	LV41200-004A	SPECIAL SCREW	(x2)	
	57	LV41200-004A	SPECIAL SCREW	(x2)	
	58	LV41200-004A	SPECIAL SCREW	(x4)	
	59	LV41200-004A	SPECIAL SCREW	(x4)	
	60	LV41200-004A	SPECIAL SCREW	(x2)	
	61	LV41200-004A	SPECIAL SCREW	(x6)	
	62	LV41200-004A	SPECIAL SCREW		
	63	LV44800-001A	SPECIAL SCREW		
	64	LV41200-004A	SPECIAL SCREW	(x3)	
	65	LV41200-004A	SPECIAL SCREW		
	66	QYSDSF3006ZA	TAP SCREW	M3 x 6mm(x2)	
	67	QYSDSF2608ZA	TAP SCREW	M2.6 x 8mm	
	68	LV41200-004A	SPECIAL SCREW		
	69	LV44800-001A	SPECIAL SCREW	(x2)	
	70	LV44800-001A	SPECIAL SCREW		

⚠	Symbol No.	Part No.	Part Name	Description	Local
	71	GE40377-003A	SCREW	(x4)	
	72	LV41200-007A	SPECIAL SCREW	(x2)	
	73	QYSDST2006MA	TAP SCREW	M2 x 6mm(x2)	
	74	QYSDST2006MA	TAP SCREW	M2 x 6mm	
	75	LV43819-008A	SPECIAL SCREW	(x4)	
	76	QYSDST2006MA	TAP SCREW	M2 x 6mm(x2)	
	77	LV44470-002A	SPECIAL SCREW	(x2)	
	78	GE10261-005A	FRONT PANEL		792J
	78	GE10261-002A	FRONT PANEL		624UI
	78	GE10261-001A	FRONT PANEL		625U,625UT,625EU
	78	GE10261-003A	FRONT PANEL		626U,626UT,626EU,626A
	78	GE10261-004A	FRONT PANEL		720J
	78	GE10261-009A	FRONT PANEL		720E,720EE
	78	GE10261-006A	FRONT PANEL		724UI
	78	GE10261-007A	FRONT PANEL		725U,725UN,725UT,725EU
	78	GE10261-008A	FRONT PANEL		726U,726UN,726UT,726EU,726A
	78	GE10261-010A	FRONT PANEL		728UF
	79	GE33537-001A	JVC BADGE TOP		792J,720J,720E,720EE,724UI,725U,725UN,725UT,725EU,726U,726UN,726UT,726EU,726A,728UF
	79	GE33537-002A	JVC BADGE TOP		624UI,625U,625UT,625EU,626U,626UT,626EU,626A
	80	GE33538-001A	JVC BADGE BASE		792J,720J,720E,720EE,724UI,725U,725UN,725UT,725EU,726U,726UN,726UT,726EU,726A,728UF
	80	GE33538-002A	JVC BADGE BASE		624UI,625U,625UT,625EU,626U,626UT,626EU,626A
	81	GE33535-001A	REMOTE LENS	(x2)	
	82	GE33533-001A	POWER BTN TOP		792J,624UI,626U,626UT,626EU,626A,720J,720E,720EE,724UI,726U,726UN,726UT,726EU,726A,728UF
	82	GE33533-002A	POWER BTN TOP		625U,625UT,625EU,725U,725UN,725UT,725EU
	83	GE33534-001A	VOLUME BTN TOP		792J,624UI,626U,626UT,626EU,626A,720J,720E,720EE,724UI,726U,726UN,726UT,726EU,726A,728UF
	83	GE33534-002A	VOLUME BTN TOP		625U,625UT,625EU,725U,725UN,725UT,725EU
	84	GE33539-001A	MENU BTN TOP		792J,624UI,626U,626UT,626EU,626A,720J,720E,720EE,724UI,726U,726UN,726UT,726EU,726A,728UF
	84	GE33539-002A	MENU BTN TOP		625U,625UT,625EU,725U,725UN,725UT
	84	GE33539-003A	MENU BTN TOP		725EU
	85	GE33540-001A	OPEN BTN TOP		792J,624UI,626U,626UT,626EU,626A,720J,720E,720EE,724UI,726U,726UN,726UT,726EU,726A,728UF
	85	GE33540-002A	OPEN BTN TOP		625U,625UT,625EU
	85	GE33540-003A	OPEN BTN TOP		725U,725UN,725UT,725EU
	86	GE20255-001A	BUTTON BASE L		792J,624UI,626U,626UT,626EU,626A,720J,720E,720EE,724UI,726U,726UN,726UT,726EU,726A,728UF
	86	GE20255-002A	BUTTON BASE L		625U,625UT,625EU,725U,725UN,725UT,725EU
	87	GE20256-004A	BUTTON BASE R		792J,720J,724UI,726U,726UN,726UT,726A,728UF
	87	GE20256-001A	BUTTON BASE R		624UI,626U,626UT,626EU,626A
	87	GE20256-002A	BUTTON BASE R		625U,625UT,625EU,725U,725UN,725UT,725EU
	87	GE20256-003A	BUTTON BASE R		720E,720EE,726EU
	88	GE20258-001A	EARTH PLATE		
	89	GE20257-001A	PCB COVER		
	90	LV44464-001A	SPECIAL SCREW	(x4)	
	91	LV40847-042A	SPACER(H)	(x8)	
	92	GE40218-0A4A	COPPER SHEET		
	93	GE40466-003A	SHEET		
	94	GE33549-001A	PANEL BKT ASSY		
	95	GE33547-002A	FRONT BKT ASSY		792J,720J,725UT,726UT
	95	GE33547-001A	FRONT BKT ASSY		624UI,625U,625UT,625EU,626U,626UT,626EU,626A,720E,720EE,724UI,725U,725UN,725EU,726U,726UN,726EU,726A,728UF
	96	LV44468-001A	SPRING	(x2)	
	97	LV44469-001A	ROLLER	(x2)	
	98	LV37306-001A	FPC COVER		
	99	LV44159-004A	MINI SCREW	(x2)	
	100	LV43819-003A	SPECAL SCREW	(x6)	792J,624UI,626U,626UT,626EU,626A,720J,720E,720EE,724UI,726U,726UN,726UT,726EU,726A,728UF
	100	LV43819-004A	SPECAL SCREW	(x6)	625U,625UT,625EU,725U,725UN,725UT,725EU
	101	LV43819-003A	SPECAL SCREW	(x2)	792J,624UI,626U,626UT,626EU,626A,720J,720E,720EE,724UI,726U,726UN,726UT,726EU,726A,728UF
	101	LV43819-004A	SPECAL SCREW	(x2)	625U,625UT,625EU,725U,725UN,725UT,725EU
	102	LV44615-001A	SCREW	(x4)	
	103	LV44615-001A	SCREW	(x4)	
	104	LV44471-003A	TOR SPRING		
	105	QYWFM628050	WASHER	8mm/6.2mm x 0.5mm(x2)	
	106	LV45039-001A	WAVE WASHER	(x2)	
	107	LV37518-001A	TRANSPORT BKT	(x2)	792J,625EU,626EU,720J,720E,720EE,725EU,726EU
	107	LV36544-001A	TRANSPORT BKT	(x2)	624UI,625U,625UT,626U,626UT,626A,724UI,725U,725UN,725UT,726U,726UN,726UT,726A,728UF
	108	QYSDSP5008ZA	SCREW	M5 x 8mm(x4)	
	109	GE33617-002A	NAME PLATE		792J
	109	GE33655-001A	NAME PLATE		624UI
	109	GE33641-001A	NAME PLATE		625U,625UT
	109	GE33644-001A	NAME PLATE		625EU
	109	GE33646-001A	NAME PLATE		626U,626UT

⚠	Symbol No.	Part No.	Part Name	Description	Local
	109	GE33649-001A	NAME PLATE		626EU
	109	GE33651-001A	NAME PLATE		626A
	109	GE33620-001A	NAME PLATE		720J
	109	GE33623-001A	NAME PLATE		720E
	109	GE33627-001A	NAME PLATE		720EE
	109	GE33652-001A	NAME PLATE		724UI
	109	GE33630-001A	NAME PLATE		725U,725UN,725UT
	109	GE33633-002A	NAME PLATE		725EU
	109	GE33635-001A	NAME PLATE		726U,726UN,726UT
	109	GE33638-002A	NAME PLATE		726EU
	109	GE33640-001A	NAME PLATE		726A
	109	GE33714-001A	NAME PLATE		728UF
	110	LV44603-003A	LASER CAUTION		
	111	LV42940-002A	CAUTION LABEL		
	112	QLD0545-001	LCD MODULE		
	113	QAL1078-001	TOUCH PANEL		
	114	QAL1053-001	FPC		
	115	QAL0937-001	FPC		
	116	WJT0229-001A-E	FFC WIRE		
	117	QAR0378-001	MOTOR		
	118	WJM0460-001A-E	E-SI C WIRE C-F		
	119	QJJ060-060801-E	SIN CR C-C W		
	120	QAR0455-002	COOLING FAN		
	121	QAM1105-002	CAR CABLE		792J,720J,720E,720EE
	121	QAM1165-001	CAR CABLE		624UI,625U,625UT,625EU,626U,626UT,626EU,626A,724UI,725U,725UN, 725UT,725EU,726U,726UN,726UT,726EU,726A,728UF
	122	GE31574-0B1A	UT LABEL		625UT
	122	GE31574-0B2A	UT LABEL		626UT
	122	GE31574-0A8A	UT LABEL		725UT
	122	GE31574-0A9A	UT LABEL		726UT
⚠	123	QMFZ039-150-T	FUSE	15A	
	124	LV43373-002A	REGULATOR BKT		
	125	GE33545-001A	IC BRACKET		
	126	QAM1077-002	USB CABLE		792J,720J,720E,720EE,724UI,725U,725UN,725UT,725EU,726U,726UN, 726UT,726EU,726A,728UF
	127	LV41200-004A	SPECIAL SCREW		792J,720J,720E,720EE,724UI,725U,725UN,725UT,725EU,726U,726UN, 726UT,726EU,726A,728UF
	128	LV41200-004A	SPECIAL SCREW		792J,720J,720E,720EE,724UI,725U,725UN,725UT,725EU,726U,726UN, 726UT,726EU,726A,728UF
	129	VYTA500-001	PIN CAP		792J,720J,720E,720EE,724UI,725U,725UN,725UT,725EU,726U,726UN, 726UT,726EU,726A,728UF
	130	QAM1166-001	CAR CABLE		792J,720J,720E,720EE,724UI,725U,725UN,725UT,725EU,726U,726UN, 726UT,726EU,726A,728UF
	131	GE40466-004A	SHIELD TIGHT		792J,720J,725UT,726UT
	132	LV22425-006A	SLEEVE ASSY		792J,625EU,626EU,720J,720E,720EE,725EU,726EU
	133	LV37151-002A	SUPPORT BKT	(x2)	792J,625EU,626EU,720J,720E,720EE,725EU,726EU
	134	QYSSSP5008ZA	SCREW	M5 x 8mm(x4)	792J,625EU,626EU,720J,720E,720EE,725EU,726EU
	135	QYSDSP2603ZA	SCREW	M2.6 x 3mm(x4)	792J,625EU,626EU,720J,720E,720EE,725EU,726EU
	136	LV44980-001A	LABEL(MERCURY)		792J,720J
	137	GE40442-001A	FCC RULE LABEL		792J,720J

DVD mechanism assembly and parts list (Except 624,625,626ver.)

Block No. M J M M

FMU-XD4-11D

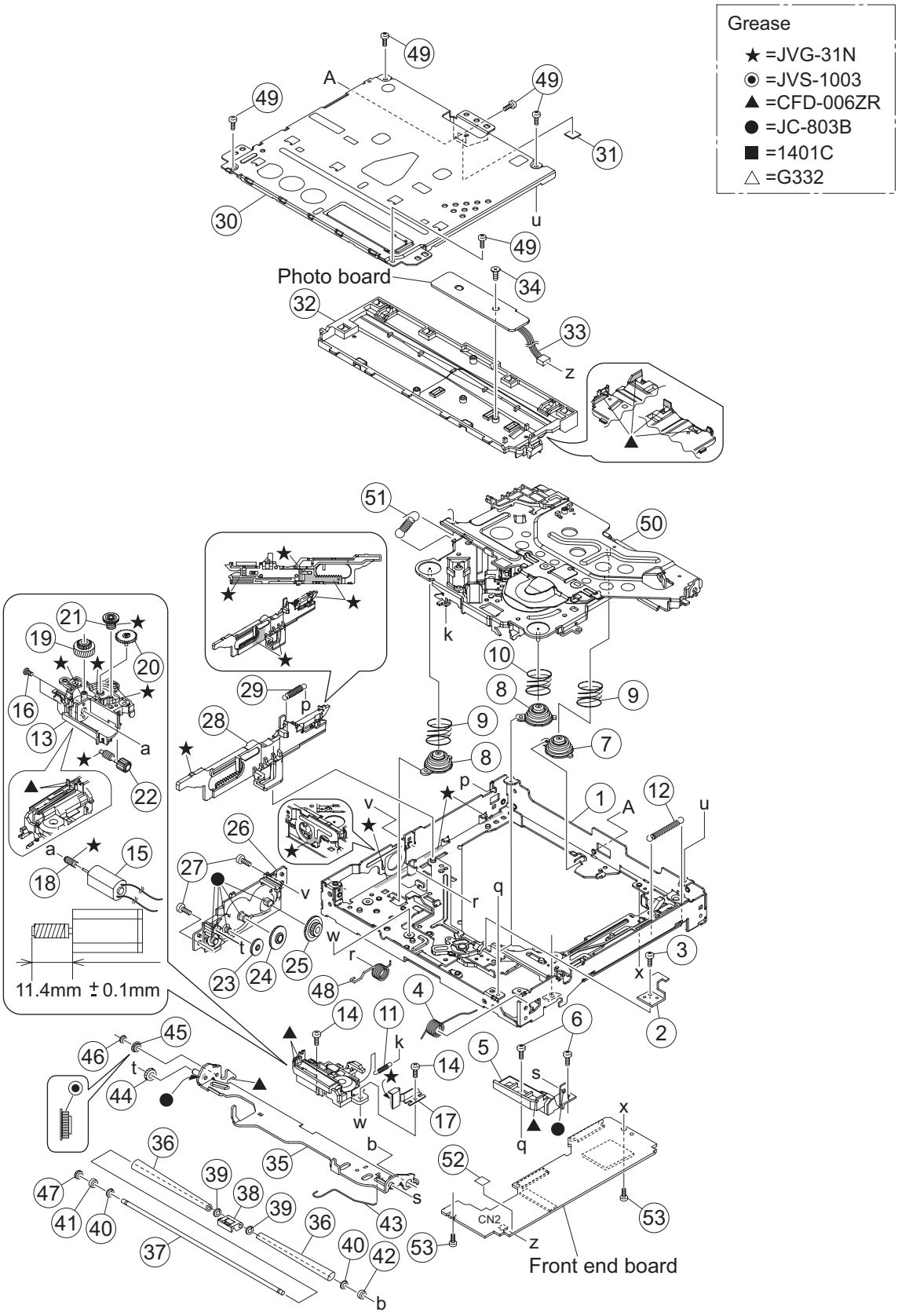

DVD mechanism (Except 624,625,626ver.)

Block No. [M][J][M][M]

⚠	Symbol No.	Part No.	Part Name	Description	Local
	1	LV11434-007A	FRAME UNIT		
	2	LV45021-001A	STOPPER		
	3	LV44959-002A	SPECIAL SCREW		
	4	LV45249-002A	L A SPRING(R) 2		
	5	LV37639-002A	L ARM HOLDER		
	6	VKZ4539-054	MINI SCREW	(x2)	
	7	LV37640-001A	DAMPER(R)		
	8	LV37641-001A	DAMPER(F)	(x2)	
	9	LV45074-001A	DAMPER SPRING B	(x2)	
	10	LV45073-001A	DAMPER SPRING A		
	11	LV44897-002A	FLOATING SPRING		
	12	LV44894-001A	LOCK SLIDER SP.		
	13	LV11436-001A	MOTOR HOLDER		
	14	LV45135-001A	MINI TAP SCREW	(x2)	
	15	QAR0465-001	LOAD MOTOR		
	16	QYSPSPU1425MA	SCREW	M1.4 x 2.5mm(x2)	
	17	LV37642-001A	MOTOR TH SPRING		
	18	LV37643-001A	MOTOR WORM GEAR		
	19	LV37644-002A	M WHEEL GEAR		
	20	LV37645-002A	M CONNECT GEAR		
	21	LV37646-001A	A WORM GEAR		
	22	LV37647-001A	A WHEEL GEAR		
	23	LV37648-001A	ACT GEAR		
	24	LV37649-001A	A CONNECT GEAR		
	25	LV37650-001A	LOADING GEAR		
	26	LV22553-003A	GEAR BASE		
	27	VKZ4539-054	MINI SCREW	(x2)	
	28	LV37688-002A	SLIDE CAM ASSY		
	29	LV45090-001A	S.CAM SPRING		
	30	LV11437-003A	TOP COVER		
	31	LV45157-001A	SPACER		
	32	LV11600-001A	DISC PLATE 2		
	33	WJM0515-001A-E	E-SI C WIRE C-F		
	34	LV44586-001A	SPECIAL SCREW		
	35	LV22735-001A	LOADING ARM A2		
	36	LV44902-002A	ROLLER	(x2)	
	37	LV45244-001A	ROLLER SHAFT 2		
	38	LV37652-002A	SHAFT GUIDE		
	39	LV45252-001A	WASHER	(x2)	
	40	LV44960-001A	SLIT WASHER	(x2)	
	41	LV44904-001A	R COLLAR L		
	42	LV45221-001A	R COLLAR R2		
	43	LV45235-001A	L.ARM ROD		
	44	LV37653-001A	R CONNECT GEAR		
	45	LV37654-001A	R MIDDLE GEAR		
	46	QYWDL1735250	SLIT WASHER	3.5mm/1.7mm x 0.25mm	
	47	LV37655-001A	ROLLER GEAR		
	48	LV45248-001A	L.A.SPRING L2		
	49	VKZ4539-054	MINI SCREW	(x5)	
	50	CM-FMUXD3D	TRAMECHA UNIT		
	51	LV44910-002A	CLAMPER SPRING		
	52	LV45289-002A	SPACER(P)		
	53	VKZ4539-054	MINI SCREW	(x2)	

DVD mechanism assembly and parts list (Only 624,625,626ver.)

Block No. M U M M

FMU-XD3-11D

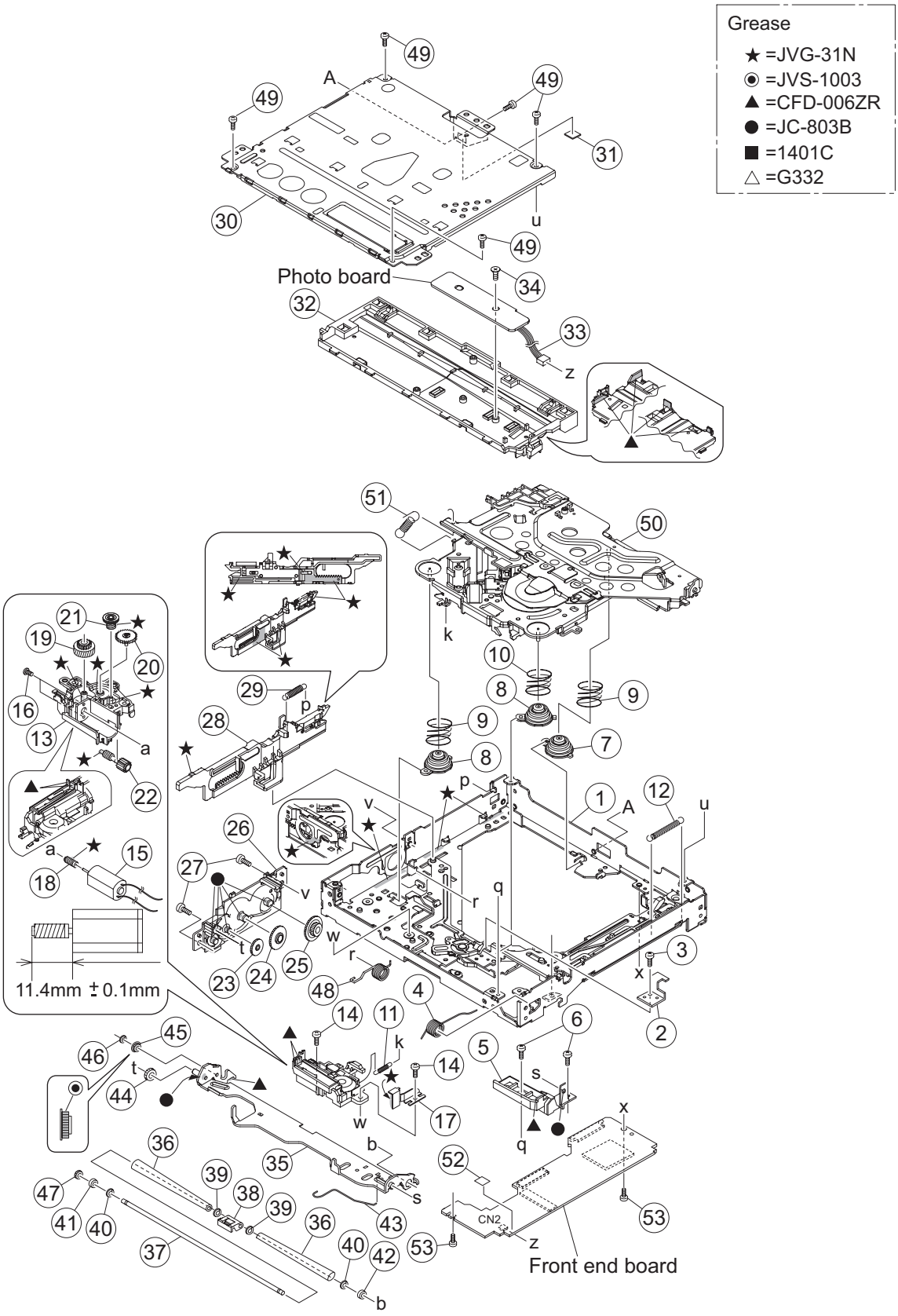

DVD mechanism (Only 624,625,626ver.)

Block No. [M][U][M][M]

⚠	Symbol No.	Part No.	Part Name	Description	Local
	1	LV11434-007A	FRAME UNIT		
	2	LV45021-001A	STOPPER		
	3	LV44959-002A	SPECIAL SCREW		
	4	LV45249-002A	L A SPRING(R) 2		
	5	LV37639-002A	L ARM HOLDER		
	6	VKZ4539-054	MINI SCREW	(x2)	
	7	LV37640-001A	DAMPER(R)		
	8	LV37641-001A	DAMPER(F)	(x2)	
	9	LV45074-001A	DAMPER SPRING B	(x2)	
	10	LV45073-001A	DAMPER SPRING A		
	11	LV44897-002A	FLOATING SPRING		
	12	LV44894-001A	LOCK SLIDER SP.		
	13	LV11436-001A	MOTOR HOLDER		
	14	LV45135-001A	MINI TAP SCREW	(x2)	
	15	QAR0465-001	LOAD MOTOR		
	16	QYSPSPU1425MA	SCREW	M1.4 x 2.5mm(x2)	
	17	LV37642-001A	MOTOR TH SPRING		
	18	LV37643-001A	MOTOR WORM GEAR		
	19	LV37644-002A	M WHEEL GEAR		
	20	LV37645-002A	M CONNECT GEAR		
	21	LV37646-001A	A WORM GEAR		
	22	LV37647-001A	A WHEEL GEAR		
	23	LV37648-001A	ACT GEAR		
	24	LV37649-001A	A CONNECT GEAR		
	25	LV37650-001A	LOADING GEAR		
	26	LV22553-003A	GEAR BASE		
	27	VKZ4539-054	MINI SCREW	(x2)	
	28	LV37688-002A	SLIDE CAM ASSY		
	29	LV45090-001A	S.CAM SPRING		
	30	LV11437-003A	TOP COVER		
	31	LV45157-001A	SPACER		
	32	LV11600-001A	DISC PLATE 2		
	33	WJM0515-001A-E	E-SI C WIRE C-F		
	34	LV44586-001A	SPECIAL SCREW		
	35	LV22735-001A	LOADING ARM A2		
	36	LV44902-002A	ROLLER	(x2)	
	37	LV45244-001A	ROLLER SHAFT 2		
	38	LV37652-002A	SHAFT GUIDE		
	39	LV45252-001A	WASHER	(x2)	
	40	LV44960-001A	SLIT WASHER	(x2)	
	41	LV44904-001A	R COLLAR L		
	42	LV45221-001A	R COLLAR R2		
	43	LV45235-001A	L.ARM ROD		
	44	LV37653-001A	R CONNECT GEAR		
	45	LV37654-001A	R MIDDLE GEAR		
	46	QYWDL1735250	SLIT WASHER	3.5mm/1.7mm x 0.25mm	
	47	LV37655-001A	ROLLER GEAR		
	48	LV45248-001A	L.A.SPRING L2		
	49	VKZ4539-054	MINI SCREW	(x5)	
	50	CM-FMUXD3D	TRAMECHA UNIT		
	51	LV44910-002A	CLAMPER SPRING		
	52	LV45289-002A	SPACER(P)		
	53	VKZ4539-054	MINI SCREW	(x2)	

Electrical parts list

Main board

Block No. [0][1]

⚠ Symbol No.	Part No.	Part Name	Description	Local
⚠ IC1	TEF6606T/V3-X	IC1		
IC71	LC72725KM-X	IC		720E,720EE,725EU,726EU
IC161	TDA7416	IC		
IC202	NJM2535V-X	IC		
IC203	MM1228XF-X	IC		
IC205	NJM2505F-X	IC		
IC371	TB2926CHQ	IC		
IC591	NJM4565E-X	IC		
⚠ IC605	BD9781HFP-W	IC		
IC606	TC7SET08FU-J-X	IC(DIGITAL)		
IC608	TOTX177L	OPT TRANSMITTER		
IC663	BD6516F-X	IC		792J,720J,720E,720EE,724UI,725U,725UN,725UT,725EU,726U,726UN,726UT,726EU,726A,728UF
⚠ IC721	JES1602	IC(PROGRAMED)		792J,720J,724UI,725U,725UN,725UT,726U,726UN,726UT,726A,728UF
⚠ IC721	JES1591	IC(PROGRAMED)		624UI,625U,625UT,625EU,626U,626UT,626EU,626A
⚠ IC721	JES1611	IC(PROGRAMED)		720E,720EE,725EU,726EU
IC771	BR24L32F-W-X	IC(DIGITAL)		
IC803	74AHCT126PW-X	IC		
IC901	R2S25400DS-E	IC		
IC912	BH33MA3WHFV-W	IC		
⚠ IC921	BA9743AFV-X	IC		
IC924	TC7SH08FU-X	IC		
IC961	BA6956AN	IC		
⚠ IC971	BA9743AFV-X	IC		
IC972	TC7SH08FU-X	IC		
Q251	2SD2114K/VW/-X	TRANSISTOR		792J,720J,720E,720EE,724UI,725U,725UN,725UT,725EU,726U,726UN,726UT,726EU,726A,728UF
Q301	RT1N441C-X	TRANSISTOR		
Q301 or	UN2213-X	DIGI TRANSISTOR		
Q302	RT1P441C-X	DIGI TRANSISTOR		
Q302 or	UN2113-X	TRANSISTOR		
Q303	RT1N441C-X	TRANSISTOR		
Q303 or	UN2213-X	DIGI TRANSISTOR		
Q341	2SC3928A/QR/-X	TRANSISTOR		
Q351	2SC3928A/QR/-X	TRANSISTOR		
Q411	RT1N141C-X	DIGI TRANSISTOR		
Q411 or	UN2211-X	TRANSISTOR		
Q421	RT1N141C-X	DIGI TRANSISTOR		
Q421 or	UN2211-X	TRANSISTOR		
Q431	2SD1994A/RS/-T	TRANSISTOR		
Q432	RT1P141C-X	DIGI TRANSISTOR		
Q432 or	UN2111-X	TRANSISTOR		
Q433	RT1N141C-X	DIGI TRANSISTOR		
Q433 or	UN2211-X	TRANSISTOR		
Q441	RSQ025P03-W	TRANSISTOR		
Q442	RT1N141C-X	DIGI TRANSISTOR		
Q442 or	UN2211-X	TRANSISTOR		
Q781	UN211L-X	TRANSISTOR		
Q782	RT1P141C-X	DIGI TRANSISTOR		
Q782 or	UN2111-X	TRANSISTOR		
Q783	RT1P141C-X	DIGI TRANSISTOR		792J,720J,720E,720EE,724UI,725U,725UN,725UT,725EU,726U,726UN,726UT,726EU,726A,728UF
Q783 or	UN2111-X	TRANSISTOR		792J,720J,720E,720EE,724UI,725U,725UN,725UT,725EU,726U,726UN,726UT,726EU,726A,728UF
Q784	2SC3928A/QR/-X	TRANSISTOR		
Q841	RT1N141C-X	DIGI TRANSISTOR		
Q841 or	UN2211-X	TRANSISTOR		
Q881	2SC3928A/QR/-X	TRANSISTOR		
Q881 or	2SC1623A/5-6/-X	TRANSISTOR		
Q891	RT1N141C-X	DIGI TRANSISTOR		
Q891 or	UN2211-X	TRANSISTOR		
Q911	RSQ025P03-W	TRANSISTOR		
Q912	RT1N141C-X	DIGI TRANSISTOR		
Q912 or	UN2211-X	TRANSISTOR		
Q922	2SC3928A/QR/-X	TRANSISTOR		
Q923	ISA1530AC1/QR/X	TRANSISTOR		
Q924	2SC3928A/QR/-X	TRANSISTOR		
Q925	ISA1530AC1/QR/X	TRANSISTOR		
Q926	RSQ030P03-W	MOS FET		
Q927	RSQ030P03-W	MOS FET		
Q951	RT1P441C-X	DIGI TRANSISTOR		
Q951 or	UN2113-X	TRANSISTOR		
Q952	RT1N441C-X	TRANSISTOR		
Q952 or	UN2213-X	DIGI TRANSISTOR		
Q961	RT1P441C-X	DIGI TRANSISTOR		
Q961 or	UN2113-X	TRANSISTOR		
Q962	RT1N441C-X	TRANSISTOR		
Q962 or	UN2213-X	DIGI TRANSISTOR		
Q963	RT1N141C-X	DIGI TRANSISTOR		
Q963 or	UN2211-X	TRANSISTOR		
Q973	RTQ035N03-W	MOS FET		
Q976	RT1N441C-X	TRANSISTOR		
Q976 or	UN2213-X	DIGI TRANSISTOR		
Q977	ISA1530AC1/QR/X	TRANSISTOR		
Q977 or	2SA812A/5-6/-X	TRANSISTOR		
Q981	ISA1530AC1/QR/X	TRANSISTOR		
Q982	2SC3928A/QR/-X	TRANSISTOR		
Q991	ISA1530AC1/QR/X	TRANSISTOR		
Q991 or	2SA812A/5-6/-X	TRANSISTOR		
Q1107	2SC3928A/QR/-X	TRANSISTOR		
Q1107 or	2SC1623A/5-6/-X	TRANSISTOR		
Q8012	2SC3928A/QR/-X	TRANSISTOR		
Q8012 or	2SC1623A/5-6/-X	TRANSISTOR		
D1	MA111-X	SI DIODE		
D1 or	1SS355W-X	DIODE		
D2	MA111-X	SI DIODE		
D2 or	1SS355W-X	DIODE		
D141	UDZW6.2B-X	Z DIODE		
D141 or	MA8062/M/-X	Z DIODE		
D142	UDZW6.2B-X	Z DIODE		
D142 or	MA8062/M/-X	Z DIODE		
D151	UDZW6.2B-X	Z DIODE		
D151 or	MA8062/M/-X	Z DIODE		
D152	UDZW6.2B-X	Z DIODE		
D152 or	MA8062/M/-X	Z DIODE		
D203	1SS355W-X	DIODE		
D203 or	MA111-X	SI DIODE		
D204	1SS355W-X	DIODE		
D204 or	MA111-X	SI DIODE		
D205	1SS355W-X	DIODE		

⚠ Symbol No.		Part No.	Part Name	Description	Local
D205	or	MA111-X	SI DIODE		
D206		1SS355W-X	DIODE		
D206	or	MA111-X	SI DIODE		
D251		1SS355W-X	DIODE		792J,720J,720E,720EE,724UI,725U,725UN,725UT,725EU,726U,726UN,726UT,726EU,726A,728UF
D251	or	MA111-X	SI DIODE		792J,720J,720E,720EE,724UI,725U,725UN,725UT,725EU,726U,726UN,726UT,726EU,726A,728UF
D301		UDZW11B-X	Z DIODE		
D301	or	MA8110/M/-X	Z DIODE		
D344		MC2836-X	DIODE		
D344	or	MA152WA-X	DIODE		
D401		MA8047/M/-X	Z DIODE		
D401	or	UDZW4.7B-X	Z DIODE		
D421		1SS355W-X	DIODE		
D421	or	MA111-X	SI DIODE		
D431		MA8120/M/-X	Z DIODE		
D431	or	UDZW12B-X	Z DIODE		
D701		MA111-X	SI DIODE		
D701	or	1SS355W-X	DIODE		
D702		MC2838-X	DIODE		
D702	or	MA152WK-X	SI DIODE		
D781		1SS355W-X	DIODE		
D781	or	MA111-X	SI DIODE		
D782		MC2836-X	DIODE		
D782	or	MA152WA-X	DIODE		
D783		1SS355W-X	DIODE		792J,720J,720E,720EE,724UI,725U,725UN,725UT,725EU,726U,726UN,726UT,726EU,726A,728UF
D783	or	MA111-X	SI DIODE		792J,720J,720E,720EE,724UI,725U,725UN,725UT,725EU,726U,726UN,726UT,726EU,726A,728UF
D784		UDZW11B-X	Z DIODE		
D784	or	MA8110/M/-X	Z DIODE		
D785		1SS355W-X	DIODE		
D785	or	MA111-X	SI DIODE		
D801		MA22D23-X	SB DIODE		
D801	or	CRS03-W	SB DIODE		
D801	or	RB160M-30-X	SB DIODE		
D851		MA22D23-X	SB DIODE		792J,624UI,625U,625UT,626U,626UT,626A,720J,724UI,725U,725UN,725UT,726U,726UN,726UT,726A,728UF
D851	or	CRS03-W	SB DIODE		792J,624UI,625U,625UT,626U,626UT,626A,720J,724UI,725U,725UN,725UT,726U,726UN,726UT,726A,728UF
D851	or	RB160M-30-X	SB DIODE		792J,624UI,625U,625UT,626U,626UT,626A,720J,724UI,725U,725UN,725UT,726U,726UN,726UT,726A,728UF

⚠ Symbol No.		Part No.	Part Name	Description	Local
D852		MA22D23-X	SB DIODE		792J,624UI,625U,625UT,626U,626UT,626A,720J,724UI,725U,725UN,725UT,726U,726UN,726UT,726A,728UF
D852	or	CRS03-W	SB DIODE		792J,624UI,625U,625UT,626U,626UT,626A,720J,724UI,725U,725UN,725UT,726U,726UN,726UT,726A,728UF
D852	or	RB160M-30-X	SB DIODE		792J,624UI,625U,625UT,626U,626UT,626A,720J,724UI,725U,725UN,725UT,726U,726UN,726UT,726A,728UF
D891		MC2836-X	DIODE		
D891	or	MA152WA-X	DIODE		
⚠ D901		1N5401-F64	SI DIODE		
D901	or	1N5401-TU-15	SI DIODE		
D906		MA22D23-X	SB DIODE		
D906	or	CRS03-W	SB DIODE		
D906	or	RB160M-30-X	SB DIODE		
D921		RB051L-40-X	SB DIODE		
D922		RB051L-40-X	SB DIODE		
D951		1SS355W-X	DIODE		
D951	or	MA111-X	SI DIODE		
D961	or	UDZW5.6B-X	Z DIODE		
D961		MA8056/M/-X	Z DIODE		
D962		MA22D23-X	SB DIODE		
D962	or	CRS03-W	SB DIODE		
D962	or	RB160M-30-X	SB DIODE		
D971		MA22D23-X	SB DIODE		792J,720J,720E,720EE,724UI,725U,725UN,725UT,725EU,726U,726UN,726UT,726EU,726A,728UF
D971		RB051L-40-X	SB DIODE		624UI,625U,625UT,625EU,626U,626UT,626EU,626A
D972		MA22D23-X	SB DIODE		
D972	or	CRS03-W	SB DIODE		
D972	or	RB160M-30-X	SB DIODE		
D973		MA22D23-X	SB DIODE		
D973	or	CRS03-W	SB DIODE		
D973	or	RB160M-30-X	SB DIODE		
D974		MA8120/M/-X	Z DIODE		
D974	or	UDZW12B-X	Z DIODE		
D975		1SS355W-X	DIODE		
D975	or	MA111-X	SI DIODE		
D994		MA22D23-X	SB DIODE		
D994	or	CRS03-W	SB DIODE		
D994	or	RB160M-30-X	SB DIODE		
D1003		LHQ974/LM/-X	LED		
D1004		LHQ974/LM/-X	LED		
D1006		UDZS9.1B-X	Z DIODE		
D1103		RB051L-40-X	SB DIODE		
D1105		RB051L-40-X	SB DIODE		
D1106		RB051L-40-X	SB DIODE		
D1661		UDZW5.1B-X	SB DIODE		792J,720J,720E,720EE,724UI,725U,725UN,725UT,725EU,726U,726UN,726UT,726EU,726A,728UF

⚠ Symbol No.	Part No.	Part Name	Description	Local
D1661 or	MA8051/M/-X	Z DIODE		792J,720J,720E,720EE,724UI,725U,725UN,725UT,725EU,726U,726UN,726UT,726EU,726A,728UF
D1662	UDZW5.1B-X	SB DIODE		792J,720J,720E,720EE,724UI,725U,725UN,725UT,725EU,726U,726UN,726UT,726EU,726A,728UF
D1662 or	MA8051/M/-X	Z DIODE		792J,720J,720E,720EE,724UI,725U,725UN,725UT,725EU,726U,726UN,726UT,726EU,726A,728UF
C1	NDC31HJ-150X	C CAPACITOR	15pF 50V J	
C2	NDC31HJ-220X	C CAPACITOR	22pF 50V J	
C3	NCB31HK-102X	C CAPACITOR	1000pF 50V K	
C4	NDC31HJ-7R0X	C CAPACITOR	7pF 50V J	
C5	NDC31HJ-5R6X	C CAPACITOR	5.6pF 50V J	
C7	NCB31HK-102X	C CAPACITOR	1000pF 50V K	
C8	NCB31CK-224X	C CAPACITOR	0.22uF 16V K	
C9	NCB31HK-103X	C CAPACITOR	0.01uF 50V K	
C13	NCB31CK-224X	C CAPACITOR	0.22uF 16V K	
C14	NCB31EK-104X	C CAPACITOR	0.1uF 25V K	
C15	NDC31HJ-150X	C CAPACITOR	15pF 50V J	
C16	NCB31CK-105X	C CAPACITOR	1uF 16V K	
C17	NCB31HK-103X	C CAPACITOR	0.01uF 50V K	
C18	NCB31HK-103X	C CAPACITOR	0.01uF 50V K	
C19	NCB31EK-104X	C CAPACITOR	0.1uF 25V K	
C20	NCB31HK-103X	C CAPACITOR	0.01uF 50V K	
C21	NCB31HK-103X	C CAPACITOR	0.01uF 50V K	
C22	NCB31EK-104X	C CAPACITOR	0.1uF 25V K	
C23	NCB31CK-105X	C CAPACITOR	1uF 16V K	
C24	NCB31EK-104X	C CAPACITOR	0.1uF 25V K	
C29	NCB31AK-105X	C CAPACITOR	1uF 10V K	
C71	NCB31CK-224X	C CAPACITOR	0.22uF 16V K	720E,720EE,725EU,726EU
C72	NDC31HJ-561X	C CAPACITOR	560pF 50V J	720E,720EE,725EU,726EU
C73	NCB31HK-103X	C CAPACITOR	0.01uF 50V K	720E,720EE,725EU,726EU
C74	NCJ21CK-106X-R	C CAPACITOR	10uF 16V K	720E,720EE,725EU,726EU
C75	NCB31HK-103X	C CAPACITOR	0.01uF 50V K	720E,720EE,725EU,726EU
C76	QETN1HM-226Z	E CAPACITOR	22uF 50V M	720E,720EE,725EU,726EU
C77	NDC31HJ-330X	C CAPACITOR	33pF 50V J	720E,720EE,725EU,726EU
C78	NDC31HJ-330X	C CAPACITOR	33pF 50V J	720E,720EE,725EU,726EU
C143	NDC31HJ-471X	C CAPACITOR	470pF 50V J	
C153	NDC31HJ-471X	C CAPACITOR	470pF 50V J	
C155	NCB31CK-104X	C CAPACITOR	0.1uF 16V K	
C161	QETN1CM-107Z	E CAPACITOR	100uF 16V M	
C162	NCB31EK-473X	C CAPACITOR	0.047uF 25V K	
C163	NCB21CK-105X	C CAPACITOR	1uF 16V K	
C164	NCB21CK-105X	C CAPACITOR	1uF 16V K	
C165	NCB21CK-105X	C CAPACITOR	1uF 16V K	
C166	NEAF1CM-106X-M	E CAPACITOR	10uF 16V M	
C168	QETN1HM-225Z	E CAPACITOR	2.2uF 50V M	
C171	QETN1HM-225Z	E CAPACITOR	2.2uF 50V M	
C172	QTE1H57-225Z	E CAPACITOR	2.2uF 50V	792J,720J,720E,720EE,724UI,725U,725UN,725UT,725EU,726U,726UN,726UT,726EU,726A,728UF

⚠ Symbol No.	Part No.	Part Name	Description	Local
C172	QTE1H64-225Z	E CAPACITOR	2.2uF 50V	624UI,625U,625UT,625EU,626U,626UT,626EU,626A
C174	QETN1HM-225Z	E CAPACITOR	2.2uF 50V M	
C177	QETN1HM-225Z	E CAPACITOR	2.2uF 50V M	
C181	QETN1HM-225Z	E CAPACITOR	2.2uF 50V M	
C182	QTE1H57-225Z	E CAPACITOR	2.2uF 50V	792J,720J,720E,720EE,724UI,725U,725UN,725UT,725EU,726U,726UN,726UT,726EU,726A,728UF
C182	QTE1H64-225Z	E CAPACITOR	2.2uF 50V	624UI,625U,625UT,625EU,626U,626UT,626EU,626A
C184	QETN1HM-225Z	E CAPACITOR	2.2uF 50V M	
C187	QETN1HM-225Z	E CAPACITOR	2.2uF 50V M	
C206	NCB21CK-105X	C CAPACITOR	1uF 16V K	
C207	NCB20JK-475X	C CAPACITOR	4.7uF 6.3V K	
C209	QETN1EM-476Z	E CAPACITOR	47uF 25V M	
C210	NCB31HK-104X	C CAPACITOR	0.1uF 50V K	
C211	NCB21CK-105X	C CAPACITOR	1uF 16V K	
C212	NCB20JK-475X	C CAPACITOR	4.7uF 6.3V K	
C213	QETN1AM-477Z	E CAPACITOR	470uF 10V M	
C214	QETN1EM-476Z	E CAPACITOR	47uF 25V M	
C215	NCB31HK-104X	C CAPACITOR	0.1uF 50V K	
C220	QETN1HM-106Z	E CAPACITOR	10uF 50V M	
C221	QETN1HM-106Z	E CAPACITOR	10uF 50V M	
C222	NCB31EK-104X	C CAPACITOR	0.1uF 25V K	
C223	QETN1EM-476Z	E CAPACITOR	47uF 25V M	
C226	NCB31HK-102X	C CAPACITOR	1000pF 50V K	
C267	QETN1HM-106Z	E CAPACITOR	10uF 50V M	792J,720J,720E,720EE,724UI,725U,725UN,725UT,725EU,726U,726UN,726UT,726EU,726A,728UF
C301	NCB31HK-223X	C CAPACITOR	0.022uF 50V K	
C302	QTE1C57-106Z	E CAPACITOR	10uF 16V	
C303	QEKJ1EM-106Z	E CAPACITOR	10uF 25V M	
C304	QEKJ1HM-225Z	E CAPACITOR	2.2uF 50V M	
C305	QETN1EM-476Z	E CAPACITOR	47uF 25V M	
C306	NCB31HK-103X	C CAPACITOR	0.01uF 50V K	
C307	QETN1HM-226Z	E CAPACITOR	22uF 50V M	
C308	NCB31HK-223X	C CAPACITOR	0.022uF 50V K	
C311	QFV91HJ-474Z	MF CAPACITOR	0.47uF 50V J	
C312	NDC31HJ-470X	C CAPACITOR	47pF 50V J	792J,720J,720E,720EE,724UI,725U,725UN,725UT,725EU,726U,726UN,726UT,726EU,726A,728UF
C312	NDC31HJ-101X	C CAPACITOR	100pF 50V J	624UI,625U,625UT,625EU,626U,626UT,626EU,626A
C321	QFV91HJ-474Z	MF CAPACITOR	0.47uF 50V J	
C322	NDC31HJ-470X	C CAPACITOR	47pF 50V J	792J,720J,720E,720EE,724UI,725U,725UN,725UT,725EU,726U,726UN,726UT,726EU,726A,728UF
C322	NDC31HJ-101X	C CAPACITOR	100pF 50V J	624UI,625U,625UT,625EU,626U,626UT,626EU,626A
C331	QFV91HJ-474Z	MF CAPACITOR	0.47uF 50V J	

⚠ Symbol No.	Part No.	Part Name	Description	Local
C332	NDC31HJ-470X	C CAPACITOR	47pF 50V J	792J,720J,720E,720EE,724UI,725U,725UN,725UT,725EU,726U,726UN,726UT,726EU,726A,728UF
C332	NDC31HJ-101X	C CAPACITOR	100pF 50V J	624UI,625U,625UT,625EU,626U,626UT,626EU,626A
C335	NDC31HJ-220X	C CAPACITOR	22pF 50V J	792J,720J,720E,720EE,724UI,725U,725UN,725UT,725EU,726U,726UN,726UT,726EU,726A,728UF
C341	QFV91HJ-474Z	MF CAPACITOR	0.47uF 50V J	
C342	NDC31HJ-470X	C CAPACITOR	47pF 50V J	792J,720J,720E,720EE,724UI,725U,725UN,725UT,725EU,726U,726UN,726UT,726EU,726A,728UF
C342	NDC31HJ-101X	C CAPACITOR	100pF 50V J	624UI,625U,625UT,625EU,626U,626UT,626EU,626A
C345	NDC31HJ-220X	C CAPACITOR	22pF 50V J	792J,720J,720E,720EE,724UI,725U,725UN,725UT,725EU,726U,726UN,726UT,726EU,726A,728UF
C346	QETN1HM-475Z	E CAPACITOR	4.7uF 50V M	
C356	QETN1HM-475Z	E CAPACITOR	4.7uF 50V M	
C411	QETN1HM-106Z	E CAPACITOR	10uF 50V M	
C421	NCB31CK-105X	C CAPACITOR	1uF 16V K	
C422	NCB31CK-103X	C CAPACITOR	0.01uF 16V K	
C433	QETN1HM-106Z	E CAPACITOR	10uF 50V M	
C434	QETN1HM-106Z	E CAPACITOR	10uF 50V M	
C435	NCB31HK-103X	C CAPACITOR	0.01uF 50V K	
C441	NCJ11EK-106X-R	C CAPACITOR	10uF 25V	
C442	NCJ11EK-106X-R	C CAPACITOR	10uF 25V	
C443	NCJ11EK-106X-R	C CAPACITOR	10uF 25V	
C444	NCB31EK-104X	C CAPACITOR	0.1uF 25V K	
C581	NDC31HJ-331X	C CAPACITOR	330pF 50V J	
C582	QTE1H57-225Z	E CAPACITOR	2.2uF 50V	
C583	NDC31HJ-470X	C CAPACITOR	47pF 50V J	
C591	NDC31HJ-331X	C CAPACITOR	330pF 50V J	
C592	QTE1H57-225Z	E CAPACITOR	2.2uF 50V	
C593	NDC31HJ-470X	C CAPACITOR	47pF 50V J	
C594	QETN1EM-476Z	E CAPACITOR	47uF 25V M	
C595	NCB31CK-104X	C CAPACITOR	0.1uF 16V K	
C596	QETN1EM-107Z	E CAPACITOR	100uF 25V M	
C597	QETN1EM-476Z	E CAPACITOR	47uF 25V M	
C702	NCB31EK-104X	C CAPACITOR	0.1uF 25V K	
C703	NCB31HK-102X	C CAPACITOR	1000pF 50V K	
C704	QETN0JM-108Z	E CAPACITOR	1000uF 6.3V M	
C706	NCB31CK-105X	C CAPACITOR	1uF 16V K	
C708	NDC31HJ-120X	C CAPACITOR	12pF 50V J	
C709	NDC31HJ-120X	C CAPACITOR	12pF 50V J	
C710	NCB31HK-103X	C CAPACITOR	0.01uF 50V K	
C711	NCB31HK-103X	C CAPACITOR	0.01uF 50V K	
C712	NCB31HK-103X	C CAPACITOR	0.01uF 50V K	
C724	NCB31HK-102X	C CAPACITOR	1000pF 50V K	
C728	NDC31HJ-120X	C CAPACITOR	12pF 50V J	
C729	NDC31HJ-120X	C CAPACITOR	12pF 50V J	
C733	NCB31HK-471X	C CAPACITOR	470pF 50V K	
C772	NCB31HK-103X	C CAPACITOR	0.01uF 50V K	
C781	QETN1EM-476Z	E CAPACITOR	47uF 25V M	
C783	QETN1EM-476Z	E CAPACITOR	47uF 25V M	792J,720J,720E,720EE,724UI,725U,725UN,725UT,725EU,726U,726UN,726UT,726EU,726A,728UF
C784	QETN1EM-476Z	E CAPACITOR	47uF 25V M	
C785	QETN1HM-225Z	E CAPACITOR	2.2uF 50V M	
C801	NCB31CK-473X	C CAPACITOR	0.047uF 16V K	
C803	NCB31CK-104X	C CAPACITOR	0.1uF 16V K	
C804	NCB31HK-102X	C CAPACITOR	1000pF 50V K	
C805	NCB31HK-102X	C CAPACITOR	1000pF 50V K	
C806	NCB31CK-104X	C CAPACITOR	0.1uF 16V K	
C807	NCB31EK-104X	C CAPACITOR	0.1uF 25V K	
C841	NCB31EK-104X	C CAPACITOR	0.1uF 25V K	
C851	NCB31CK-104X	C CAPACITOR	0.1uF 16V K	792J,624UI,625U,625UT,626U,626UT,626A,720J,724UI,725U,725UN,725UT,726U,726UN,726UT,726A,728UF
C881	QETN1HM-226Z	E CAPACITOR	22uF 50V M	
C882	NCB31CK-103X	C CAPACITOR	0.01uF 16V K	
C891	NCB31CK-104X	C CAPACITOR	0.1uF 16V K	
C892	NCB31CK-104X	C CAPACITOR	0.1uF 16V K	
C901	QEZ0870-278	E CAPACITOR	2700uF	
C902	NCB31EK-104X	C CAPACITOR	0.1uF 25V K	
C903	QETN1HM-225Z	E CAPACITOR	2.2uF 50V M	
C904	NCB31EK-104X	C CAPACITOR	0.1uF 25V K	
C905	NCB31EK-104X	C CAPACITOR	0.1uF 25V K	
C906	QETN1AM-227Z	E CAPACITOR	220uF 10V M	
C907	QETN1CM-107Z	E CAPACITOR	100uF 16V M	
C908	NCB31HK-103X	C CAPACITOR	0.01uF 50V K	
C909	QETN1HM-226Z	E CAPACITOR	22uF 50V M	
C910	QEKJ1CM-476Z	E CAPACITOR	47uF 16V M	
C911	QETN1HM-106Z	E CAPACITOR	10uF 50V M	
C913	QETN1AM-227Z	E CAPACITOR	220uF 10V M	
C921	NCB31HK-272X	C CAPACITOR	2700pF 50V K	
C923	NCB31HK-332X	C CAPACITOR	3300pF 50V K	
C924	NCB31AK-105X	C CAPACITOR	1uF 10V K	
C925	NCB31AK-334X	C CAPACITOR	0.33uF 10V K	
C926	NCB31HK-104X	C CAPACITOR	0.1uF 50V K	
C928	NCB31HK-102X	C CAPACITOR	1000pF 50V K	
C929	NCB31EK-104X	C CAPACITOR	0.1uF 25V K	
C930	NCB31EK-104X	C CAPACITOR	0.1uF 25V K	
C932	QETN1HM-226Z	E CAPACITOR	22uF 50V M	
C933	NCB20JK-106X	C CAPACITOR	10uF 6.3V K	
C934	NBZ0009-127X	E. CAPACITOR	120uF	
C935	NCB31HK-332X	C CAPACITOR	3300pF 50V K	
C936	QETN1HM-226Z	E CAPACITOR	22uF 50V M	
C938	NBZ0009-127X	E. CAPACITOR	120uF	
C940	NCB31HK-103X	C CAPACITOR	0.01uF 50V K	
C951	QETN0JM-108Z	E CAPACITOR	1000uF 6.3V M	
C952	NCB31HK-103X	C CAPACITOR	0.01uF 50V K	
C953	NCB31CK-105X	C CAPACITOR	1uF 16V K	
C954	NDC31HJ-120X	C CAPACITOR	12pF 50V J	
C961	QETN1AM-227Z	E CAPACITOR	220uF 10V M	
C962	NCB31HK-103X	C CAPACITOR	0.01uF 50V K	
C971	NCB31HK-103X	C CAPACITOR	0.01uF 50V K	
C972	NCB31HK-104X	C CAPACITOR	0.1uF 50V K	
C973	NCB31HK-272X	C CAPACITOR	2700pF 50V K	
C974	NCB31HK-104X	C CAPACITOR	0.1uF 50V K	
C975	NCB31CK-105X	C CAPACITOR	1uF 16V K	
C976	NCB31HK-222X	C CAPACITOR	2200pF 50V K	
C978	NCB31HK-682X	C CAPACITOR	6800pF 50V K	
C979	NCB31HK-104X	C CAPACITOR	0.1uF 50V K	
C980	NCJ11EK-106X-R	C CAPACITOR	10uF 25V	
C981	NDC31HJ-221X	C CAPACITOR	220pF 50V J	
C982	NCJ11EK-106X-R	C CAPACITOR	10uF 25V	
C983	QEZ0595-477Z	E CAPACITOR	470uF 25V M	
C984	NCB31HK-104X	C CAPACITOR	0.1uF 50V K	
C985	NCF21HZ-105X	C CAPACITOR	1uF 50V Z	
C986	NCB31HK-104X	C CAPACITOR	0.1uF 50V K	
C987	NCB31CK-105X	C CAPACITOR	1uF 16V K	
C988	QETN1EM-476Z	E CAPACITOR	47uF 25V M	
C994	NCB31EK-104X	C CAPACITOR	0.1uF 25V K	

⚠ Symbol No.	Part No.	Part Name	Description	Local
C1006	NCB31EK-103X	C CAPACITOR	0.01uF 25V K	
C1108	NCB31EK-104X	C CAPACITOR	0.1uF 25V K	
C1109	NBZ0009-127X	E. CAPACITOR	120uF	
C1110	NCB31HK-103X	C CAPACITOR	0.01uF 50V K	
C1111	QEZ0595-477Z	E CAPACITOR	470uF 25V M	
C1112	NCB31EK-104X	C CAPACITOR	0.1uF 25V K	
C1113	NCB31HK-472X	C CAPACITOR	4700pF 50V K	
C1114	NCB31HK-103X	C CAPACITOR	0.01uF 50V K	
C1118	NCB31EK-104X	C CAPACITOR	0.1uF 25V K	
C1122	QETN0JM-108Z	E CAPACITOR	1000uF 6.3V M	
C1125	QETN1AM-227Z	E CAPACITOR	220uF 10V M	
C1222	QETN1HM-106Z	E CAPACITOR	10uF 50V M	
C1226	NCB31HK-103X	C CAPACITOR	0.01uF 50V K	
C1661	NCB31EK-104X	C CAPACITOR	0.1uF 25V K	792J,720J,720E,720EE,724UI,725U,725UN,725UT,725EU,726U,726UN,726UT,726EU,726A,728UF
C1662	QERF0JM-337Z	E CAPACITOR	330uF 6.3V M	792J,720J,720E,720EE,724UI,725U,725UN,725UT,725EU,726U,726UN,726UT,726EU,726A,728UF
C1664	NCB31EK-104X	C CAPACITOR	0.1uF 25V K	792J,720J,720E,720EE,724UI,725U,725UN,725UT,725EU,726U,726UN,726UT,726EU,726A,728UF
R1	NRSA63J-474X	MG RESISTOR	470kΩ 1/16W J	
R2	NRSA63J-474X	MG RESISTOR	470kΩ 1/16W J	
R3	NRSA63J-472X	MG RESISTOR	4.7kΩ 1/16W J	
R4	NRS181J-220X	MG RESISTOR	22Ω 1/8W J	
R5	NRSA6AJ-472W	MG RESISTOR	4.7kΩ 1/16W J	
R6	NRSA6AJ-472W	MG RESISTOR	4.7kΩ 1/16W J	
R7	NRSA63J-752X	MG RESISTOR	7.5kΩ 1/16W J	792J,720J
R7	NRSA63J-682X	MG RESISTOR	6.8kΩ 1/16W J	624UI,625U,625UT,625EU,626U,626UT,626EU,626A,720E,720EE,724UI,725U,725UN,725UT,725EU,726U,726UN,726UT,726EU,726A,728UF
R8	NRSA63J-752X	MG RESISTOR	7.5kΩ 1/16W J	792J,720J
R8	NRSA63J-682X	MG RESISTOR	6.8kΩ 1/16W J	624UI,625U,625UT,625EU,626U,626UT,626EU,626A,720E,720EE,724UI,725U,725UN,725UT,725EU,726U,726UN,726UT,726EU,726A,728UF
R9	NRSA63J-392X	MG RESISTOR	3.9kΩ 1/16W J	792J,720J
R9	NRSA63J-822X	MG RESISTOR	8.2kΩ 1/16W J	624UI,625U,625UT,625EU,626U,626UT,626EU,626A,720E,720EE,724UI,725U,725UN,725UT,725EU,726U,726UN,726UT,726EU,726A,728UF
R10	NRSA63J-392X	MG RESISTOR	3.9kΩ 1/16W J	792J,720J

⚠ Symbol No.	Part No.	Part Name	Description	Local
R10	NRSA63J-822X	MG RESISTOR	8.2kΩ 1/16W J	624UI,625U,625UT,625EU,626U,626UT,626EU,626A,720E,720EE,724UI,725U,725UN,725UT,725EU,726U,726UN,726UT,726EU,726A,728UF
R11	NRS181J-4R7X	MG RESISTOR	4.7Ω 1/8W J	
R17	NRSA63J-101X	MG RESISTOR	100Ω 1/16W J	
R18	NRSA6AJ-0R0W	MG RESISTOR	0Ω 1/16W J	
R19	NRSA6AJ-0R0W	MG RESISTOR	0Ω 1/16W J	
R71	NRSA6AJ-222W	MG RESISTOR	2.2kΩ 1/16W J	720E,720EE,725EU,726EU
R72	NRSA6AJ-222W	MG RESISTOR	2.2kΩ 1/16W J	720E,720EE,725EU,726EU
R74	NRSA6AJ-0R0W	MG RESISTOR	0Ω 1/16W J	720E,720EE,725EU,726EU
R141	NRSA63J-473X	MG RESISTOR	47kΩ 1/16W J	
R142	NRSA63J-0R0X	MG RESISTOR	0Ω 1/10W J	
R151	NRSA63J-473X	MG RESISTOR	47kΩ 1/16W J	
R152	NRSA63J-0R0X	MG RESISTOR	0Ω 1/10W J	
R155	NRSA63J-471X	MG RESISTOR	470Ω 1/16W J	
R162	NRSA6AJ-473W	MG RESISTOR	47kΩ 1/16W J	
R164	NRSA6AJ-473W	MG RESISTOR	47kΩ 1/16W J	
R165	NRSA6AJ-473W	MG RESISTOR	47kΩ 1/16W J	792J,720J,720E,720EE,724UI,725U,725UN,725UT,725EU,726U,726UN,726UT,726EU,726A,728UF
R166	NRSA6AJ-271W	MG RESISTOR	270Ω 1/16W J	
R167	NRSA6AJ-271W	MG RESISTOR	270Ω 1/16W J	
R181	NRSA6AJ-0R0W	MG RESISTOR	0Ω 1/16W J	
R182	NRSA6AJ-0R0W	MG RESISTOR	0Ω 1/16W J	
R205	NRSA63J-105X	MG RESISTOR	1MΩ 1/16W J	
R206	NRSA6AJ-100W	MG RESISTOR	10Ω 1/16W J	
R207	NRSA6AJ-101W	MG RESISTOR	100Ω 1/16W J	
R209	NRSA6AJ-100W	MG RESISTOR	10Ω 1/16W J	
R210	NRSA6AJ-105W	MG RESISTOR	1MΩ 1/16W J	
R211	NRSA6AJ-750W	MG RESISTOR	75Ω 1/16W J	
R212	NRSA6AJ-103W	MG RESISTOR	10kΩ 1/16W J	
R217	NRSA6AJ-471W	MG RESISTOR	470Ω 1/16W J	
R218	NRSA6AJ-471W	MG RESISTOR	470Ω 1/16W J	
R219	NRSA6AJ-104W	MG RESISTOR	100kΩ 1/16W J	
R220	NRSA6AJ-104W	MG RESISTOR	100kΩ 1/16W J	
R221	NRSA63J-390X	MG RESISTOR	39Ω 1/16W J	
R223	NRS181J-0R0X	MG RESISTOR	0Ω 1/8W J	
R225	NRSA63J-332X	MG RESISTOR	3.3kΩ 1/16W J	
R226	NRSA63J-181X	MG RESISTOR	180Ω 1/16W J	
R227	NRSA6AJ-100W	MG RESISTOR	10Ω 1/16W J	
R240	NRSA6AJ-101W	MG RESISTOR	100Ω 1/16W J	
R252	NRSA6AJ-101W	MG RESISTOR	100Ω 1/16W J	792J,720J,720E,720EE,724UI,725U,725UN,725UT,725EU,726U,726UN,726UT,726EU,726A,728UF
R253	NRSA6AJ-102W	MG RESISTOR	1kΩ 1/16W J	792J,720J,720E,720EE,724UI,725U,725UN,725UT,725EU,726U,726UN,726UT,726EU,726A,728UF
R254	NRSA6AJ-222W	MG RESISTOR	2.2kΩ 1/16W J	792J,720J,720E,720EE,724UI,725U,725UN,725UT,725EU,726U,726UN,726UT,726EU,726A,728UF
R301	NRSA6AJ-222W	MG RESISTOR	2.2kΩ 1/16W J	
R302	NRSA6AJ-100W	MG RESISTOR	10Ω 1/16W J	

⚠ Symbol No.	Part No.	Part Name	Description	Local
R303	NRSA6AJ-273W	MG RESISTOR	27kΩ 1/16W J	
R311	NRSA6AJ-561W	MG RESISTOR	560Ω 1/16W J	792J,720J,720E,720EE,724UI,725U,725UN,725UT,725EU,726U,726UN,726UT,726EU,726A,728UF
R311	NRSA6AJ-0R0W	MG RESISTOR	0Ω 1/16W J	624UI,625U,625UT,625EU,626U,626UT,626EU,626A
R312	NRSA6AJ-561W	MG RESISTOR	560Ω 1/16W J	792J,720J,720E,720EE,724UI,725U,725UN,725UT,725EU,726U,726UN,726UT,726EU,726A,728UF
R312	NRSA6AJ-0R0W	MG RESISTOR	0Ω 1/16W J	624UI,625U,625UT,625EU,626U,626UT,626EU,626A
R321	NRSA6AJ-561W	MG RESISTOR	560Ω 1/16W J	792J,720J,720E,720EE,724UI,725U,725UN,725UT,725EU,726U,726UN,726UT,726EU,726A,728UF
R321	NRSA6AJ-0R0W	MG RESISTOR	0Ω 1/16W J	624UI,625U,625UT,625EU,626U,626UT,626EU,626A
R322	NRSA6AJ-561W	MG RESISTOR	560Ω 1/16W J	792J,720J,720E,720EE,724UI,725U,725UN,725UT,725EU,726U,726UN,726UT,726EU,726A,728UF
R322	NRSA6AJ-0R0W	MG RESISTOR	0Ω 1/16W J	624UI,625U,625UT,625EU,626U,626UT,626EU,626A
R331	NRSA63J-561X	MG RESISTOR	560Ω 1/16W J	792J,720J,720E,720EE,724UI,725U,725UN,725UT,725EU,726U,726UN,726UT,726EU,726A,728UF
R331	NRSA63J-0R0X	MG RESISTOR	0Ω 1/10W J	624UI,625U,625UT,625EU,626U,626UT,626EU,626A
R332	NRSA6AJ-561W	MG RESISTOR	560Ω 1/16W J	792J,720J,720E,720EE,724UI,725U,725UN,725UT,725EU,726U,726UN,726UT,726EU,726A,728UF
R332	NRSA6AJ-0R0W	MG RESISTOR	0Ω 1/16W J	624UI,625U,625UT,625EU,626U,626UT,626EU,626A
R341	NRSA6AJ-561W	MG RESISTOR	560Ω 1/16W J	792J,720J,720E,720EE,724UI,725U,725UN,725UT,725EU,726U,726UN,726UT,726EU,726A,728UF
R341	NRSA6AJ-0R0W	MG RESISTOR	0Ω 1/16W J	624UI,625U,625UT,625EU,626U,626UT,626EU,626A
R342	NRSA6AJ-561W	MG RESISTOR	560Ω 1/16W J	792J,720J,720E,720EE,724UI,725U,725UN,725UT,725EU,726U,726UN,726UT,726EU,726A,728UF
R342	NRSA6AJ-0R0W	MG RESISTOR	0Ω 1/16W J	624UI,625U,625UT,625EU,626U,626UT,626EU,626A
R343	NRSA6AJ-473W	MG RESISTOR	47kΩ 1/16W J	
R344	NRSA6AJ-222W	MG RESISTOR	2.2kΩ 1/16W J	
R345	NRSA6AJ-102W	MG RESISTOR	1kΩ 1/16W J	
R346	NRSA6AJ-101W	MG RESISTOR	100Ω 1/16W J	
R353	NRSA6AJ-473W	MG RESISTOR	47kΩ 1/16W J	
R354	NRSA6AJ-222W	MG RESISTOR	2.2kΩ 1/16W J	
R355	NRSA6AJ-102W	MG RESISTOR	1kΩ 1/16W J	
R356	NRSA6AJ-101W	MG RESISTOR	100Ω 1/16W J	
R401	NRSA6AJ-271W	MG RESISTOR	270Ω 1/16W J	
R402	NRSA6AJ-0R0W	MG RESISTOR	0Ω 1/16W J	
R411	NRSA6AJ-103W	MG RESISTOR	10kΩ 1/16W J	
R421	NRSA6AJ-473W	MG RESISTOR	47kΩ 1/16W J	
R422	NRSA6AJ-472W	MG RESISTOR	4.7kΩ 1/16W J	
R423	NRSA6AJ-103W	MG RESISTOR	10kΩ 1/16W J	
R431	NRSA6AJ-220W	MG RESISTOR	22Ω 1/16W J	
R432	NRSA6AJ-220W	MG RESISTOR	22Ω 1/16W J	
R433	NRSA6AJ-471W	MG RESISTOR	470Ω 1/16W J	
R435	NRSA6AJ-472W	MG RESISTOR	4.7kΩ 1/16W J	
R441	NRSA6AJ-103W	MG RESISTOR	10kΩ 1/16W J	
R444	NRZ0084-0R0X	MG RESISTOR	0Ω	
R445	NRS181J-0R0X	MG RESISTOR	0Ω 1/8W J	
R446	NRSA63J-0R0X	MG RESISTOR	0Ω 1/10W J	
R447	NRSA63J-0R0X	MG RESISTOR	0Ω 1/10W J	
R448	NRSA63J-0R0X	MG RESISTOR	0Ω 1/10W J	
R582	NRSA63J-203X	MG RESISTOR	20kΩ 1/16W J	
R583	NRSA63J-203X	MG RESISTOR	20kΩ 1/16W J	
R584	NQR0360-001X	FERRITE BEADS		792J,720J,720E,720EE,724UI,725U,725UN,725UT,725EU,726U,726UN,726UT,726EU,726A,728UF
R584	NRSA63J-0R0X	MG RESISTOR	0Ω 1/10W J	624UI,625U,625UT,625EU,626U,626UT,626EU,626A
R585	NRSA63J-243X	MG RESISTOR	24kΩ 1/16W J	
R586	NRSA6AJ-472W	MG RESISTOR	4.7kΩ 1/16W J	
R587	NRSA6AJ-472W	MG RESISTOR	4.7kΩ 1/16W J	
R588	NRSA63J-472X	MG RESISTOR	4.7kΩ 1/16W J	
R589	NRSA63J-472X	MG RESISTOR	4.7kΩ 1/16W J	
R591	NQR0360-001X	FERRITE BEADS		792J,720J,720E,720EE,724UI,725U,725UN,725UT,725EU,726U,726UN,726UT,726EU,726A,728UF
R591	NRSA63J-0R0X	MG RESISTOR	0Ω 1/10W J	624UI,625U,625UT,625EU,626U,626UT,626EU,626A
R592	NRSA63J-203X	MG RESISTOR	20kΩ 1/16W J	
R593	NRSA63J-203X	MG RESISTOR	20kΩ 1/16W J	
R594	NQR0360-001X	FERRITE BEADS		792J,720J,720E,720EE,724UI,725U,725UN,725UT,725EU,726U,726UN,726UT,726EU,726A,728UF
R594	NRSA63J-0R0X	MG RESISTOR	0Ω 1/10W J	624UI,625U,625UT,625EU,626U,626UT,626EU,626A
R595	NRSA63J-243X	MG RESISTOR	24kΩ 1/16W J	
R596	NRSA6AJ-472W	MG RESISTOR	4.7kΩ 1/16W J	

⚠ Symbol No.	Part No.	Part Name	Description	Local
R597	NRSA6AJ-472W	MG RESISTOR	4.7kΩ 1/16W J	
R598	NRSA63J-472X	MG RESISTOR	4.7kΩ 1/16W J	
R599	NRSA63J-472X	MG RESISTOR	4.7kΩ 1/16W J	
R701	NRSA6AJ-0R0W	MG RESISTOR	0Ω 1/16W J	
R702	NRSA6AJ-0R0W	MG RESISTOR	0Ω 1/16W J	624UI,625U,625UT,625EU,626U,626UT,626EU,626A,720E,720EE,725EU,726EU
R703	NRSA6AJ-222W	MG RESISTOR	2.2kΩ 1/16W J	
R704	NRSA6AJ-102W	MG RESISTOR	1kΩ 1/16W J	
R705	NRSA6AJ-102W	MG RESISTOR	1kΩ 1/16W J	
R706	NRSA6AJ-102W	MG RESISTOR	1kΩ 1/16W J	
R707	NRSA6AJ-101W	MG RESISTOR	100Ω 1/16W J	
R709	NRSA6AJ-0R0W	MG RESISTOR	0Ω 1/16W J	624UI,625U,625UT,625EU,626U,626UT,626EU,626A,720E,720EE,725EU,726EU
R710	NRSA6AJ-221W	MG RESISTOR	220Ω 1/16W J	
R711	NRSA6AJ-221W	MG RESISTOR	220Ω 1/16W J	
R712	NRSA63J-472X	MG RESISTOR	4.7kΩ 1/16W J	
R714	NRSA6AJ-472W	MG RESISTOR	4.7kΩ 1/16W J	
R715	NRSA6AJ-271W	MG RESISTOR	270Ω 1/16W J	
R716	NRSA6AJ-271W	MG RESISTOR	270Ω 1/16W J	
R717	NRSA6AJ-101W	MG RESISTOR	100Ω 1/16W J	
R718	NRSA6AJ-102W	MG RESISTOR	1kΩ 1/16W J	
R719	NRSA6AJ-222W	MG RESISTOR	2.2kΩ 1/16W J	
R720	NRSA63J-473X	MG RESISTOR	47kΩ 1/16W J	
R721	NRSA63J-473X	MG RESISTOR	47kΩ 1/16W J	
R722	NRSA6AJ-471W	MG RESISTOR	470Ω 1/16W J	
R723	NRSA6AJ-103W	MG RESISTOR	10kΩ 1/16W J	
R724	NRSA6AJ-103W	MG RESISTOR	10kΩ 1/16W J	
R725	NRSA63J-0R0X	MG RESISTOR	0Ω 1/10W J	
R726	NRSA63J-163X	MG RESISTOR	16kΩ 1/16W J	
R728	NRSA6AJ-472W	MG RESISTOR	4.7kΩ 1/16W J	
R730	NRSA6AJ-102W	MG RESISTOR	1kΩ 1/16W J	
R731	NRSA6AJ-102W	MG RESISTOR	1kΩ 1/16W J	
R734	NRSA6AJ-473W	MG RESISTOR	47kΩ 1/16W J	
R735	NRSA6AJ-473W	MG RESISTOR	47kΩ 1/16W J	
R736	NRSA6AJ-222W	MG RESISTOR	2.2kΩ 1/16W J	792J,720J,720E,720EE
R737	NRSA6AJ-223W	MG RESISTOR	22kΩ 1/16W J	792J,720J,720E,720EE
R738	NRSA6AJ-472W	MG RESISTOR	4.7kΩ 1/16W J	
R739	NRSA6AJ-102W	MG RESISTOR	1kΩ 1/16W J	
R743	NRSA6AJ-472W	MG RESISTOR	4.7kΩ 1/16W J	
R744	NRSA6AJ-472W	MG RESISTOR	4.7kΩ 1/16W J	
R746	NRSA6AJ-103W	MG RESISTOR	10kΩ 1/16W J	792J,720E,720EE,724UI,725U,725UN,725UT,726U,726UN,726UT,726A,728UF
R747	NRSA6AJ-103W	MG RESISTOR	10kΩ 1/16W J	720J,720EE,724UI,725U,725UN,725UT,725EU,726U,726UN,726UT,726EU,726A,728UF
R748	NRSA6AJ-102W	MG RESISTOR	1kΩ 1/16W J	
R749	NRSA6AJ-102W	MG RESISTOR	1kΩ 1/16W J	
R750	NRSA6AJ-102W	MG RESISTOR	1kΩ 1/16W J	
R751	NRSA6AJ-102W	MG RESISTOR	1kΩ 1/16W J	
R752	NRSA6AJ-222W	MG RESISTOR	2.2kΩ 1/16W J	624UI,625U,625UT,625EU,626U,626UT,626EU,626A,724UI,725U,725UN,725UT,725EU,726U,726UN,726UT,726EU,726A,728UF
R753	NRSA6AJ-223W	MG RESISTOR	22kΩ 1/16W J	
R754	NRSA6AJ-102W	MG RESISTOR	1kΩ 1/16W J	
R755	NRSA6AJ-102W	MG RESISTOR	1kΩ 1/16W J	
R756	NRSA6AJ-102W	MG RESISTOR	1kΩ 1/16W J	
R757	NRSA63J-473X	MG RESISTOR	47kΩ 1/16W J	

⚠ Symbol No.	Part No.	Part Name	Description	Local
R758	NRSA6AJ-0R0W	MG RESISTOR	0Ω 1/16W J	
R759	NRSA6AJ-271W	MG RESISTOR	270Ω 1/16W J	
R760	NRSA6AJ-271W	MG RESISTOR	270Ω 1/16W J	
R763	NRSA6AJ-103W	MG RESISTOR	10kΩ 1/16W J	
R764	NRSA6AJ-473W	MG RESISTOR	47kΩ 1/16W J	
R771	NRS181J-0R0X	MG RESISTOR	0Ω 1/8W J	
R773	NRZ0084-0R0X	MG RESISTOR	0Ω	
R775	NRSA63J-0R0X	MG RESISTOR	0Ω 1/10W J	
R776	NRSA63J-0R0X	MG RESISTOR	0Ω 1/10W J	
R777	NRS181J-0R0X	MG RESISTOR	0Ω 1/8W J	
R778	NRS181J-0R0X	MG RESISTOR	0Ω 1/8W J	
R781	NRSA6AJ-471W	MG RESISTOR	470Ω 1/16W J	
R783	NRSA6AJ-471W	MG RESISTOR	470Ω 1/16W J	
R784	NRSA63J-0R0X	MG RESISTOR	0Ω 1/10W J	
R785	NRSA6AJ-473W	MG RESISTOR	47kΩ 1/16W J	
R786	NRSA6AJ-101W	MG RESISTOR	100Ω 1/16W J	
R787	NRSA6AJ-473W	MG RESISTOR	47kΩ 1/16W J	
R788	NRSA6AJ-471W	MG RESISTOR	470Ω 1/16W J	
R789	NRSA6AJ-472W	MG RESISTOR	4.7kΩ 1/16W J	
R794	NRSA6AJ-102W	MG RESISTOR	1kΩ 1/16W J	
R796	NRSA6AJ-103W	MG RESISTOR	10kΩ 1/16W J	
R801	NRSA6AJ-392W	MG RESISTOR	3.9kΩ 1/16W J	
R802	NRSA6AJ-682W	MG RESISTOR	6.8kΩ 1/16W J	
R803	NRSA6AJ-104W	MG RESISTOR	100kΩ 1/16W J	
R804	NRSA6AJ-103W	MG RESISTOR	10kΩ 1/16W J	
R805	NRSA6AJ-101W	MG RESISTOR	100Ω 1/16W J	
R806	NRSA6AJ-473W	MG RESISTOR	47kΩ 1/16W J	
R807	NRSA6AJ-392W	MG RESISTOR	3.9kΩ 1/16W J	
R808	NRSA6AJ-682W	MG RESISTOR	6.8kΩ 1/16W J	
R809	NRSA6AJ-103W	MG RESISTOR	10kΩ 1/16W J	
R810	NRSA6AJ-101W	MG RESISTOR	100Ω 1/16W J	
R811	NRSA6AJ-473W	MG RESISTOR	47kΩ 1/16W J	
R812	NRSA6AJ-104W	MG RESISTOR	100kΩ 1/16W J	
R814	NRSA6AJ-101W	MG RESISTOR	100Ω 1/16W J	
R815	NRSA6AJ-151W	MG RESISTOR	150Ω 1/16W J	
R816	NRSA6AJ-151W	MG RESISTOR	150Ω 1/16W J	
R851	NRSA63J-103X	MG RESISTOR	10kΩ 1/16W J	792J,624UI,625U,625UT,626U,626UT,626A,720J,724UI,725U,725UN,725UT,726U,726UN,726UT,726A,728UF
R881	NRSA6AJ-473W	MG RESISTOR	47kΩ 1/16W J	
R882	NRSA6AJ-103W	MG RESISTOR	10kΩ 1/16W J	
R883	NRSA6AJ-104W	MG RESISTOR	100kΩ 1/16W J	
R891	NRSA63J-473X	MG RESISTOR	47kΩ 1/16W J	
R892	NRSA6AJ-102W	MG RESISTOR	1kΩ 1/16W J	
R903	QRE142J-102X	C RESISTOR	1kΩ 1/4W J	
R905	NRSA63J-472X	MG RESISTOR	4.7kΩ 1/16W J	
R906	NRSA63J-912X	MG RESISTOR	9.1kΩ 1/16W J	
R907	NRSA6AJ-333W	MG RESISTOR	33kΩ 1/16W J	
R908	NRSA6AJ-473W	MG RESISTOR	47kΩ 1/16W J	
R913	NRSA6AJ-103W	MG RESISTOR	10kΩ 1/16W J	
R916	NRS181J-0R0X	MG RESISTOR	0Ω 1/8W J	
R921	NRSA6AJ-122W	MG RESISTOR	1.2kΩ 1/16W J	
R924	NRSA6AJ-121W	MG RESISTOR	120Ω 1/16W J	
R925	NRSA6AJ-333W	MG RESISTOR	33kΩ 1/16W J	
R926	NRSA6AJ-333W	MG RESISTOR	33kΩ 1/16W J	
R927	NRSA6AJ-823W	MG RESISTOR	82kΩ 1/16W J	
R928	NRSA6AJ-563W	MG RESISTOR	56kΩ 1/16W J	
R929	NRSA6AJ-333W	MG RESISTOR	33kΩ 1/16W J	
R930	NRSA6AJ-683W	MG RESISTOR	68kΩ 1/16W J	
R931	NRSA6AJ-333W	MG RESISTOR	33kΩ 1/16W J	
R932	NRSA6AJ-563W	MG RESISTOR	56kΩ 1/16W J	
R933	NRSA6AJ-392W	MG RESISTOR	3.9kΩ 1/16W J	
R934	NRSA6AJ-0R0W	MG RESISTOR	0Ω 1/16W J	
R935	NRSA6AJ-471W	MG RESISTOR	470Ω 1/16W J	
R936	NRSA63J-471X	MG RESISTOR	470Ω 1/16W J	
R937	NRSA63J-5R6X	MG RESISTOR	5.6Ω 1/16W J	
R938	NRSA63J-821X	MG RESISTOR	820Ω 1/16W J	
R939	NRSA63J-821X	MG RESISTOR	820Ω 1/16W J	
R940	NRSA63J-821X	MG RESISTOR	820Ω 1/16W J	
R941	NRSA63J-821X	MG RESISTOR	820Ω 1/16W J	
R942	NRSA63J-0R0X	MG RESISTOR	0Ω 1/10W J	
R943	NRSA63J-332X	MG RESISTOR	3.3kΩ 1/16W J	
R944	NRSA63J-470X	MG RESISTOR	47Ω 1/16W J	
R945	NRSA63J-102X	MG RESISTOR	1kΩ 1/16W J	

⚠ Symbol No.	Part No.	Part Name	Description	Local
R946	NRSA6AJ-471W	MG RESISTOR	470Ω 1/16W J	
R947	NRSA63J-471X	MG RESISTOR	470Ω 1/16W J	
R948	NRSA63J-5R6X	MG RESISTOR	5.6Ω 1/16W J	
R949	NRSA63J-821X	MG RESISTOR	820Ω 1/16W J	
R950	NRSA63J-821X	MG RESISTOR	820Ω 1/16W J	
R951	NRSA63J-821X	MG RESISTOR	820Ω 1/16W J	
R952	NRSA63J-821X	MG RESISTOR	820Ω 1/16W J	
R953	NRSA63D-621X	MG RESISTOR	620Ω 1/16W D	
R954	NRSA63J-102X	MG RESISTOR	1kΩ 1/16W J	
R956	NRSA63J-102X	MG RESISTOR	1kΩ 1/16W J	
R957	NRSA6AJ-104W	MG RESISTOR	100kΩ 1/16W J	
R958	NRSA6AJ-273W	MG RESISTOR	27kΩ 1/16W J	
R961	NRSA6AJ-102W	MG RESISTOR	1kΩ 1/16W J	
R962	NRSA6AJ-222W	MG RESISTOR	2.2kΩ 1/16W J	
R969	NRSA63J-562X	MG RESISTOR	5.6kΩ 1/16W J	
R970	NRSA63J-333X	MG RESISTOR	33kΩ 1/16W J	
R971	NRSA63J-122X	MG RESISTOR	1.2kΩ 1/16W J	
R972	NRSA63J-153X	MG RESISTOR	15kΩ 1/16W J	
R973	NRSA63J-563X	MG RESISTOR	56kΩ 1/16W J	
R974	NRSA63J-104X	MG RESISTOR	100kΩ 1/16W J	
R975	NRSA63J-333X	MG RESISTOR	33kΩ 1/16W J	
R976	NRSA63J-563X	MG RESISTOR	56kΩ 1/16W J	
R977	NRSA63J-183X	MG RESISTOR	18kΩ 1/16W J	
R978	NRSA63J-103X	MG RESISTOR	10kΩ 1/16W J	
R979	NRSA63J-122X	MG RESISTOR	1.2kΩ 1/16W J	
R980	NRSA63J-822X	MG RESISTOR	8.2kΩ 1/16W J	
R981	NRSA63J-681X	MG RESISTOR	680Ω 1/16W J	
R982	NRSA63J-124X	MG RESISTOR	120kΩ 1/16W J	
R983	NRSA63J-333X	MG RESISTOR	33kΩ 1/16W J	
R984	NRSA63J-470X	MG RESISTOR	47Ω 1/16W J	
R985	NRSA63J-471X	MG RESISTOR	470Ω 1/16W J	
R986	NRSA63J-333X	MG RESISTOR	33kΩ 1/16W J	
R987	NRSA63J-333X	MG RESISTOR	33kΩ 1/16W J	
R988	NRSA63J-151X	MG RESISTOR	150Ω 1/16W J	
R989	NRSA63J-100X	MG RESISTOR	10Ω 1/16W J	
R993	NRSA63J-472X	MG RESISTOR	4.7kΩ 1/16W J	
R994	NRS181J-222X	MG RESISTOR	2.2kΩ 1/8W J	
R995	NRS181J-222X	MG RESISTOR	2.2kΩ 1/8W J	
R1107	NRSA63F-123X	MG RESISTOR	12kΩ 1/16W F	
R1108	NRSA63J-333X	MG RESISTOR	33kΩ 1/16W J	
R1109	NRSA63J-823X	MG RESISTOR	82kΩ 1/16W J	
R1110	NRSA63J-332X	MG RESISTOR	3.3kΩ 1/16W J	
R1112	NRSA6AJ-0R0W	MG RESISTOR	0Ω 1/16W J	
R1117	NRSA63F-473X	MG RESISTOR	47kΩ 1/16W F	
R1125	NRS181J-0R0X	MG RESISTOR	0Ω 1/8W J	
R1140	NRSA63J-122X	MG RESISTOR	1.2kΩ 1/16W J	
R1141	NRSA63J-681X	MG RESISTOR	680Ω 1/16W J	
R1205	NRS181J-0R0X	MG RESISTOR	0Ω 1/8W J	
R1227	NRSA63J-2R2X	MG RESISTOR	2.2Ω 1/16W J	
R1228	NRSA63J-0R0X	MG RESISTOR	0Ω 1/10W J	
R1229	NRSA63J-0R0X	MG RESISTOR	0Ω 1/10W J	
R1352	NRS181J-0R0X	MG RESISTOR	0Ω 1/8W J	624UI,625U,625UT,625EU,626U,626UT,626EU,626A
R1355	NRS181J-0R0X	MG RESISTOR	0Ω 1/8W J	624UI,625U,625UT,625EU,626U,626UT,626EU,626A
R1356	NRS181J-0R0X	MG RESISTOR	0Ω 1/8W J	624UI,625U,625UT,625EU,626U,626UT,626EU,626A
R1362	NRS181J-0R0X	MG RESISTOR	0Ω 1/8W J	624UI,625U,625UT,625EU,626U,626UT,626EU,626A
R1364	NRS181J-0R0X	MG RESISTOR	0Ω 1/8W J	624UI,625U,625UT,625EU,626U,626UT,626EU,626A
R1374	NRSA63J-473X	MG RESISTOR	47kΩ 1/16W J	
R1666	NRSA63J-102X	MG RESISTOR	1kΩ 1/16W J	792J,720J,720E,720EE,724UI,725U,725UN,725UT,725EU,726U,726UN,726UT,726EU,726A,728UF
R1667	NRSA63J-0R0X	MG RESISTOR	0Ω 1/10W J	

⚠ Symbol No.	Part No.	Part Name	Description	Local
R1829	NRSA63J-103X	MG RESISTOR	10kΩ 1/16W J	
R1832	NRSA63J-122X	MG RESISTOR	1.2kΩ 1/16W J	
R1834	NRSA63J-122X	MG RESISTOR	1.2kΩ 1/16W J	
R1846	NRSA63J-102X	MG RESISTOR	1kΩ 1/16W J	
R1847	NRSA63J-102X	MG RESISTOR	1kΩ 1/16W J	
R7102	NRSA6AJ-473W	MG RESISTOR	47kΩ 1/16W J	
RA202	NRZ0065-301X	MG RESISTOR	300Ω	
RA702	NRZ0034-102W	NET RESISTOR	1kΩ 1/32W J x4	
RA703	NRZ0034-102W	NET RESISTOR	1kΩ 1/32W J x4	
RA704	NRZ0034-102W	NET RESISTOR	1kΩ 1/32W J x4	
RA705	NRZ0034-102W	NET RESISTOR	1kΩ 1/32W J x4	
RA706	NRZ0034-102W	NET RESISTOR	1kΩ 1/32W J x4	
RA707	NRZ0034-102W	NET RESISTOR	1kΩ 1/32W J x4	
RA708	NRZ0034-102W	NET RESISTOR	1kΩ 1/32W J x4	
RA841	NRZ0065-392X	NET RESISTOR	3.9kΩ	
L1	NQL093K-R22X	COIL	0.22uH K	
L2	NQL093K-4R7X	COIL	4.7uH K	
L3	NQL093K-R47X	COIL	0.47uH K	
L4	NQL093K-R47X	COIL	0.47uH K	
L5	NQL093K-1R8X	COIL	1.8uH K	
L6	NQL114K-561X	P COIL	560uH K	
L7	NQL114K-561X	P COIL	560uH K	
L8	NRS181J-0R0X	MG RESISTOR	0Ω 1/8W J	
L202	NQL79GM-470X	COIL	47uH M	
L203	NQL79GM-470X	COIL	47uH M	
L204	NQL79GM-470X	COIL	47uH M	
L441	NQL52EM-220X	COIL	22uH M	
L701	NQR0022-005X	FERRITE BEADS		
L901	or QQR0703-001	CHOKE COIL		792J,720J
L901	QQR1852-001	CHOKE COIL		792J,720J
L901	QQR0703-001	CHOKE COIL		624UI,625U,625UT,625EU,626U,626UT,626EU,626A,720E,720EE,724UI,725U,725UN,725UT,725EU,726U,726UN,726UT,726EU,726A,728UF
L910	NQLE74M-100X	COIL	10uH M	
L921	NQL79GM-100X	COIL	10uH M	
L922	NQLC8CM-220X	COIL	22uH M	
L923	NQL79GM-100X	COIL	10uH M	
L924	NQLC8CM-220X	COIL	22uH M	
L951	NQL79GM-100X	COIL	10uH M	
L961	NQLE74M-100X	COIL	10uH M	
L971	NQLD7EM-470X	COIL	47uH M	
L972	NQL79GM-220X	COIL	22uH M	
L973	NQL79GM-220X	COIL	22uH M	
L974	NQL79GM-220X	COIL	22uH M	
L975	NQL79GM-220X	COIL	22uH M	
L1102	NQL71EM-330X	COIL	33uH M	
L1103	NQL79GM-220X	COIL	22uH M	
L1104	NQLE74M-100X	COIL	10uH M	
L1105	NQL79GM-220X	COIL	22uH M	
L1106	NQL79GM-220X	COIL	22uH M	
L1661	NQR0536-001X	CHOKE COIL		792J,720J,720E,720EE,724UI,725U,725UN,725UT,725EU,726U,726UN,726UT,726EU,726A,728UF
T1	QQR1813-001	COIL		
BZ841	QAN0023-001Z	BUZZER		
CN601	QGA2001F1-05	CONNECTOR	W-B (1-5)	792J,720J,720E,720EE,724UI,725U,725UN,725UT,725EU,726U,726UN,726UT,726EU,726A,728UF
CN604	QGA2001F1-02	CONNECTOR	W-B (1-2)	
CN701	QGF0562F1-45W	CONNECTOR	FFC/FPC (1-45)	
CN702	QGA2501C1-03	CONNECTOR	W-B (1-3)	

⚠ Symbol No.	Part No.	Part Name	Description	Local
CN704	QGB2027L9-30X	CONNECTOR	B-B (1-30)	
CN708	QGA2501C1-02	CONNECTOR	W-B (1-2)	792J,720J,720E,720EE,724UI,725U,725UN,725UT,725EU,726U,726UN,726UT,726EU,726A,728UF
CN803	QGF0534F3-50X	CONNECTOR	FFC/FPC (1-50)	
CN811	QGB2027MA-30	CONNECTOR	B-B (1-30)	
CN901	QNZ0090-001	CAR CONNECTOR		
CN961	QGA1002C1-06X	CONNECTOR	W-B (1-6)	
⚠ F901	NMFZ018-2R5X-E	FUSE	2.5A	
⚠ F902	NMFZ018-2R5X-E	FUSE	2.5A	
⚠ F903	NMFZ018-3R0X-E	FUSE	3A	
⚠ F1901	NMFZ018-2R5X-E	FUSE	2.5A	
J1	QNB0190-001	ANT TERMINAL		
J321	QNN0844-001	CONNECTOR		
J801	QNZ0095-001	CONNECTOR		
K445	NQR0129-002X	FERRITE BEADS		
K1220	NQR0022-005X	FERRITE BEADS		
PP1	QZW0010-001	STYLE PIN		
TH721	NAD0028-103X	N THERMISTOR	10kΩ	
X1	QAX0928-001Z	CRYSTAL		
X2	QAX0926-001Z	CRYSTAL		720E,720EE,725EU,726EU
X721	QAX0916-001Z	CRYSTAL		
X722	QAX0401-001	CRYSTAL	32.768KHz	

Panel board

Block No. [0][2]

⚠ Symbol No.	Part No.	Part Name	Description	Local
⚠ IC601	JES1651	IC(PROGRAMED)		
IC631	OZ964ISN-X	IC		
IC632	TC7SET08FU-J-X	IC(DIGITAL)		
IC633	TPCP8402JVC-X	POWER MOS FET		
IC634	TPCP8402JVC-X	POWER MOS FET		
⚠ IC661	MN103SE60P	IC		
IC662	NJU6368PF1-X	IC		
IC663	TC7SH04FU-X	IC		
IC664	HY57V641620FTPH	IC		
IC665	FSDG3058D006SCS	IC(PROGRAMED)		792J
IC665	FSDG3067D041SCS	IC(PROGRAMED)		624UI
IC665	FSDG3065D007SCS	IC(PROGRAMED)		625U
IC665	FSDG3065D010SCS	IC(PROGRAMED)		625UT
IC665	FSDG3070D043SCS	IC(PROGRAMED)		625EU
IC665	FSDG3066D007SCS	IC(PROGRAMED)		626U
IC665	FSDG3066D010SCS	IC(PROGRAMED)		626UT
IC665	FSDG3071D043SCS	IC(PROGRAMED)		626EU
IC665	FSDG3066D003SCS	IC(PROGRAMED)		626A
IC665	FSDG3059D006SCS	IC(PROGRAMED)		720J
IC665	FSDG3063D005SCS	IC(PROGRAMED)		720E
IC665	FSDG3064D027SCS	IC(PROGRAMED)		720EE
IC665	FSDG3062D041SCS	IC(PROGRAMED)		724UI
IC665	FSDG3060D007SCS	IC(PROGRAMED)		725U
IC665	FSDG3060D036SCS	IC(PROGRAMED)		725UN
IC665	FSDG3060D010SCS	IC(PROGRAMED)		725UT
IC665	FSDG3068D043SCS	IC(PROGRAMED)		725EU
IC665	FSDG3061D007SCS	IC(PROGRAMED)		726U
IC665	FSDG3061D036SCS	IC(PROGRAMED)		726UN
IC665	FSDG3061D010SCS	IC(PROGRAMED)		726UT
IC665	FSDG3069D043SCS	IC(PROGRAMED)		726EU
IC665	FSDG3061D003SCS	IC(PROGRAMED)		726A
IC665	FSDG3101D023SCS	IC(PROGRAMED)		728UF
IC666	TC7PA14FU-X	IC		
IC667	TC74VHCT04AFT-X	IC		
IC669	NJM072BV-X	IC		
IC671	RS-771-X	RM.RECEIVER		
IC681	NJM2904V-X	IC		
IC851	CPI-210/BC/-X	PHOTO COUPLER		

⚠ Symbol No.	Part No.	Part Name	Description	Local
Q601	ISA1530AC1/QR/X	TRANSISTOR		
Q601 or	2SA2077-X	TRANSISTOR		
Q602	2SC3928A/QR/-X	TRANSISTOR		
Q602 or	2SC5845-X	TRANSISTOR		
Q603	RT1N141C-X	DIGI TRANSISTOR		
Q603 or	UN2211-X	TRANSISTOR		
Q604	2SC5938A/B/-X	TRANSISTOR		
Q6001	ISA1530AC1/QR/X	TRANSISTOR		
Q6001 or	2SA2077-X	TRANSISTOR		
Q6305	ISA1530AC1/QR/X	TRANSISTOR		
Q6305 or	2SA2077-X	TRANSISTOR		
Q6307	RT1N141C-X	DIGI TRANSISTOR		
Q6307 or	UN2211-X	TRANSISTOR		
Q6401	2SC3928A/QR/-X	TRANSISTOR		
Q6401 or	2SC5845-X	TRANSISTOR		
Q6402	ISA1530AC1/QR/X	TRANSISTOR		
Q6402 or	2SA2077-X	TRANSISTOR		
Q6403	2SC3928A/QR/-X	TRANSISTOR		
Q6403 or	2SC5845-X	TRANSISTOR		
Q6404	2SC3928A/QR/-X	TRANSISTOR		
Q6404 or	2SC5845-X	TRANSISTOR		
Q6405	ISA1530AC1/QR/X	TRANSISTOR		
Q6405 or	2SA2077-X	TRANSISTOR		
Q6406	ISA1530AC1/QR/X	TRANSISTOR		
Q6406 or	2SA2077-X	TRANSISTOR		
Q6407	2SC3928A/QR/-X	TRANSISTOR		
Q6407 or	2SC5845-X	TRANSISTOR		
Q6701	RT1P141C-X	DIGI TRANSISTOR		
Q6701 or	UN2111-X	TRANSISTOR		
Q6702	ISA1530AC1/QR/X	TRANSISTOR		
Q6702 or	2SA2077-X	TRANSISTOR		
Q6703	RT1N141C-X	DIGI TRANSISTOR		
Q6703 or	UN2211-X	TRANSISTOR		
Q6704	ISA1530AC1/QR/X	TRANSISTOR		
Q6704 or	2SA2077-X	TRANSISTOR		
Q6705	RT1N141C-X	DIGI TRANSISTOR		
Q6705 or	UN2211-X	TRANSISTOR		
Q6806	2SC3928A/QR/-X	TRANSISTOR		
Q6806 or	2SC5845-X	TRANSISTOR		
Q6807	RT1N141C-X	DIGI TRANSISTOR		
Q6807 or	UN2211-X	TRANSISTOR		
Q6808	2SA2119K-X	TRANSISTOR		
Q6809	2SA2119K-X	TRANSISTOR		
Q6810	2SC5938A/B/-X	TRANSISTOR		
Q6811	2SC5938A/B/-X	TRANSISTOR		
Q8501	2SC3928A/QR/-X	TRANSISTOR		
Q8501 or	2SC5845-X	TRANSISTOR		
D601	MA111-X	SI DIODE		
D601 or	1SS355W-X	DIODE		
D602	MC2836-X	DIODE		
D602 or	MA152WA-X	DIODE		
D671	CL-201IR-X-X	LED		
D672	NECBB205/WPQR/X	LED		792J,720J,720E,720EE,724UI,725U,725UN,725UT,725EU,726U,726UN,726UT,726EU,726A,728UF
D672	LHQ974/LM/-X	LED		624UI,625U,625UT,625EU,626U,626UT,626EU,626A
D673	NECBB205/WPQR/X	LED		792J,720J,720E,720EE,724UI,725U,725UN,725UT,725EU,726U,726UN,726UT,726EU,726A,728UF
D673	LHQ974/LM/-X	LED		624UI,625U,625UT,625EU,626U,626UT,626EU,626A

⚠ Symbol No.	Part No.	Part Name	Description	Local
D674	NECBB205/WPQR/X	LED		792J,720J,720E,720EE,724UI,725U,725UN,725UT,725EU,726U,726UN,726UT,726EU,726A,728UF
D674	LHQ974/LM/-X	LED		624UI,625U,625UT,625EU,626U,626UT,626EU,626A
D675	NECBB205/WPQR/X	LED		792J,720J,720E,720EE,724UI,725U,725UN,725UT,725EU,726U,726UN,726UT,726EU,726A,728UF
D675	LHQ974/LM/-X	LED		624UI,625U,625UT,625EU,626U,626UT,626EU,626A
D676	NECBB205/WPQR/X	LED		792J,720J,720E,720EE,724UI,725U,725UN,725UT,725EU,726U,726UN,726UT,726EU,726A,728UF
D676	LHQ974/LM/-X	LED		624UI,625U,625UT,625EU,626U,626UT,626EU,626A
D677	NECBB205/WPQR/X	LED		792J,720J,720E,720EE,724UI,725U,725UN,725UT,725EU,726U,726UN,726UT,726EU,726A,728UF
D677	LHQ974/LM/-X	LED		624UI,625U,625UT,625EU,626U,626UT,626EU,626A
D678	NECBB205/WPQR/X	LED		792J,720J,720E,720EE,724UI,725U,725UN,725UT,725EU,726U,726UN,726UT,726EU,726A,728UF
D678	LHQ974/LM/-X	LED		624UI,625U,625UT,625EU,626U,626UT,626EU,626A
D679	NECBB205/WPQR/X	LED		792J,720J,720E,720EE,724UI,725U,725UN,725UT,725EU,726U,726UN,726UT,726EU,726A,728UF
D679	LHQ974/LM/-X	LED		624UI,625U,625UT,625EU,626U,626UT,626EU,626A
D680	NECBB205/WPQR/X	LED		792J,720J,720E,720EE,724UI,725U,725UN,725UT,725EU,726U,726UN,726UT,726EU,726A,728UF
D680	LHQ974/LM/-X	LED		624UI,625U,625UT,625EU,626U,626UT,626EU,626A
D681	NECBB205/WPQR/X	LED		792J,720J,720E,720EE,724UI,725U,725UN,725UT,725EU,726U,726UN,726UT,726EU,726A,728UF
D681	LHQ974/LM/-X	LED		624UI,625U,625UT,625EU,626U,626UT,626EU,626A
D682	NECBB205/WPQR/X	LED		792J,720J,720E,720EE,724UI,725U,725UN,725UT,725EU,726U,726UN,726UT,726EU,726A,728UF
D682	LHQ974/LM/-X	LED		624UI,625U,625UT,625EU,626U,626UT,626EU,626A
D683	NECBB205/WPQR/X	LED		792J,720J,720E,720EE,724UI,725U,725UN,725UT,725EU,726U,726UN,726UT,726EU,726A,728UF
D683	LHQ974/LM/-X	LED		624UI,625U,625UT,625EU,626U,626UT,626EU,626A
D684	NECWB205/B2/-X	E CAPACITOR		792J,720J,720E,720EE,724UI,725U,725UN,725UT,725EU,726U,726UN,726UT,726EU,726A,728UF
D685	NECWB205/B2/-X	E CAPACITOR		792J,720J,720E,720EE,724UI,725U,725UN,725UT,725EU,726U,726UN,726UT,726EU,726A,728UF
D686	NECWB205/B2/-X	E CAPACITOR		792J,720J,720E,720EE,724UI,725U,725UN,725UT,725EU,726U,726UN,726UT,726EU,726A,728UF
D687	NECWB205/B2/-X	E CAPACITOR		792J,720J,720E,720EE,724UI,725U,725UN,725UT,725EU,726U,726UN,726UT,726EU,726A,728UF
D688	NECBB205/WPQR/X	LED		792J,720J,720E,720EE,724UI,725U,725UN,725UT,725EU,726U,726UN,726UT,726EU,726A,728UF
D688	LHQ974/LM/-X	LED		624UI,625U,625UT,625EU,626U,626UT,626EU,626A
D689	NECBB205/WPQR/X	LED		792J,720J,720E,720EE,724UI,725U,725UN,725UT,725EU,726U,726UN,726UT,726EU,726A,728UF
D689	LHQ974/LM/-X	LED		624UI,625U,625UT,625EU,626U,626UT,626EU,626A
D690	NECBB205/WPQR/X	LED		792J,720J,720E,720EE,724UI,725U,725UN,725UT,725EU,726U,726UN,726UT,726EU,726A,728UF
D690	LHQ974/LM/-X	LED		624UI,625U,625UT,625EU,626U,626UT,626EU,626A

⚠ Symbol No.	Part No.	Part Name	Description	Local
D691	NECBB205/WPQR/X	LED		792J,720J,720E,720EE,724UI,725U,725UN,725UT,725EU,726U,726UN,726UT,726EU,726A,728UF
D691	LHQ974/LM/-X	LED		624UI,625U,625UT,625EU,626U,626UT,626EU,626A
D6001	MA2SD31-X	SB DIODE		
D6002	MA2SD31-X	SB DIODE		
D6301	MA111-X	SI DIODE		
D6301	or 1SS355W-X	DIODE		
D6302	MA8047/M/-X	Z DIODE		
D6303	MA8047/M/-X	Z DIODE		
D6304	BAV99L-X	SI DIODE		
D6305	MA8047/M/-X	Z DIODE		
D6306	MA8047/M/-X	Z DIODE		
D6307	BAV99L-X	SI DIODE		
D6401	MA2SD31-X	SB DIODE		
D6701	MC2838-X	DIODE		
D6701	or MA152WK-X	SI DIODE		
D6702	MA111-X	SI DIODE		
D6702	or 1SS355W-X	DIODE		
D6806	MA111-X	SI DIODE		
D6806	or 1SS355W-X	DIODE		
D6807	MA111-X	SI DIODE		
D6807	or 1SS355W-X	DIODE		
C601	NCB30JK-105X	C CAPACITOR	1uF 6.3V K	
C602	NBE40JM-476X	TA E CAPACITOR	47uF 6.3V M	
C603	NDCA1HJ-101W	C CAPACITOR	100pF 50V J	
C604	NDCA1HJ-101W	C CAPACITOR	100pF 50V J	
C605	NCBA1AK-473W	C CAPACITOR	0.047uF 10V K	
C606	NCBA1AK-473W	C CAPACITOR	0.047uF 10V K	
C607	NDCA1HJ-5R0W	C CAPACITOR	5pF 50V J	
C608	NDCA1HJ-5R0W	C CAPACITOR	5pF 50V J	
C609	NCB31AK-474X	C CAPACITOR	0.47uF 10V K	
C610	NCB30JK-105X	C CAPACITOR	1uF 6.3V K	
C611	NCBA1CK-103W	C CAPACITOR	0.01uF 16V K	
C613	NCBA1AK-473W	C CAPACITOR	0.047uF 10V K	
C672	NCBA1AK-104W	C CAPACITOR	0.1uF 10V K	
C673	NCBA1HK-102W	C CAPACITOR	1000pF 50V K	
C6001	NCJA0JK-105W-R	C CAPACITOR	1uF 6.3V K	792J,720J
C6001	NCBA1AK-104W	C CAPACITOR	0.1uF 10V K	624UI,625U,625UT,625EU,626U,626UT,626EU,626A,720E,720EE,724UI,725U,725UN,725UT,725EU,726U,726UN,726UT,726EU,726A,728UF
C6002	NCJA0JK-105W-R	C CAPACITOR	1uF 6.3V K	792J,720J
C6002	NDCA1HJ-471W	C CAPACITOR	470pF 50V J	624UI,625U,625UT,625EU,626U,626UT,626EU,626A,720E,720EE,724UI,725U,725UN,725UT,725EU,726U,726UN,726UT,726EU,726A,728UF
C6003	NCJA0JK-105W-R	C CAPACITOR	1uF 6.3V K	792J,720J
C6003	NCBA1AK-104W	C CAPACITOR	0.1uF 10V K	624UI,625U,625UT,625EU,626U,626UT,626EU,626A,720E,720EE,724UI,725U,725UN,725UT,725EU,726U,726UN,726UT,726EU,726A,728UF
C6004	NCBA1AK-104W	C CAPACITOR	0.1uF 10V K	
C6005	NCBA1AK-104W	C CAPACITOR	0.1uF 10V K	
C6006	NCBA1AK-104W	C CAPACITOR	0.1uF 10V K	
C6007	NCBA1AK-104W	C CAPACITOR	0.1uF 10V K	

⚠ Symbol No.	Part No.	Part Name	Description	Local
C6008	NCBA1AK-104W	C CAPACITOR	0.1uF 10V K	
C6009	NCBA1AK-104W	C CAPACITOR	0.1uF 10V K	
C6010	NCBA1AK-104W	C CAPACITOR	0.1uF 10V K	
C6011	NCBA1AK-104W	C CAPACITOR	0.1uF 10V K	
C6012	NCBA1AK-104W	C CAPACITOR	0.1uF 10V K	
C6013	NCB20JK-106X	C CAPACITOR	10uF 6.3V K	
C6014	NCBA1AK-104W	C CAPACITOR	0.1uF 10V K	
C6015	NCB20JK-106X	C CAPACITOR	10uF 6.3V K	
C6016	NCB20JK-106X	C CAPACITOR	10uF 6.3V K	
C6017	NCBA1AK-104W	C CAPACITOR	0.1uF 10V K	
C6018	NCBA1AK-104W	C CAPACITOR	0.1uF 10V K	
C6019	NCBA1AK-104W	C CAPACITOR	0.1uF 10V K	
C6020	NCBA1AK-104W	C CAPACITOR	0.1uF 10V K	
C6021	NCBA1AK-104W	C CAPACITOR	0.1uF 10V K	
C6022	NCBA1AK-104W	C CAPACITOR	0.1uF 10V K	
C6023	NCBA1AK-104W	C CAPACITOR	0.1uF 10V K	
C6024	NCBA1AK-104W	C CAPACITOR	0.1uF 10V K	
C6025	NCBA1AK-104W	C CAPACITOR	0.1uF 10V K	
C6026	NCBA1AK-104W	C CAPACITOR	0.1uF 10V K	
C6027	NBE40JM-107X	TA E CAPACITOR	100uF 6.3V M	792J,720J
C6027	NBE40JM-476X	TA E CAPACITOR	47uF 6.3V M	624UI,625U,625UT,625EU,626U,626UT,626EU,626A,720E,720EE,724UI,725U,725UN,725UT,725EU,726U,726UN,726UT,726EU,726A,728UF
C6028	NCBA1AK-104W	C CAPACITOR	0.1uF 10V K	
C6029	NBE20JM-226X	TA E CAPACITOR	22uF 6.3V M	
C6030	NDCA1HJ-680W	C CAPACITOR	68pF 50V J	
C6031	NDCA1HJ-330W	C CAPACITOR	33pF 50V J	
C6032	NCBA1CK-103W	C CAPACITOR	0.01uF 16V K	
C6033	NDCA1HJ-120W	C CAPACITOR	12pF 50V J	
C6034	NDCA1HJ-100W	C CAPACITOR	10pF 50V J	
C6035	NCBA1AK-104W	C CAPACITOR	0.1uF 10V K	
C6036	NCBA1AK-104W	C CAPACITOR	0.1uF 10V K	
C6037	NCBA1AK-104W	C CAPACITOR	0.1uF 10V K	
C6038	NCBA1AK-104W	C CAPACITOR	0.1uF 10V K	
C6039	NCJA0JK-105W-R	C CAPACITOR	1uF 6.3V K	792J,720J
C6039	NCBA1AK-104W	C CAPACITOR	0.1uF 10V K	624UI,625U,625UT,625EU,626U,626UT,626EU,626A,720E,720EE,724UI,725U,725UN,725UT,725EU,726U,726UN,726UT,726EU,726A,728UF
C6040	NDCA1HJ-100W	C CAPACITOR	10pF 50V J	
C6041	NDCA1HJ-100W	C CAPACITOR	10pF 50V J	
C6042	NCBA1AK-104W	C CAPACITOR	0.1uF 10V K	
C6043	NCBA1AK-104W	C CAPACITOR	0.1uF 10V K	
C6044	NCJ20JM-226X-R	C CAPACITOR	22uF 6.3V M	
C6045	NCBA1AK-104W	C CAPACITOR	0.1uF 10V K	
C6047	NDCA1HJ-180W	C CAPACITOR	18pF 50V J	
C6048	NDCA1HJ-680W	C CAPACITOR	68pF 50V J	
C6049	NCB31HK-102X	C CAPACITOR	1000pF 50V K	
C6050	NCBA1AK-104W	C CAPACITOR	0.1uF 10V K	
C6051	NCBA1AK-104W	C CAPACITOR	0.1uF 10V K	
C6055	NCB20JK-106X	C CAPACITOR	10uF 6.3V K	
C6056	NCB20JK-106X	C CAPACITOR	10uF 6.3V K	
C6057	NCB20JK-106X	C CAPACITOR	10uF 6.3V K	
C6058	NCB31HK-103X	C CAPACITOR	0.01uF 50V K	
C6059	NQR0450-001X	EMI FILTER	0.022uF 50V M	
C6062	NCBA1AK-104W	C CAPACITOR	0.1uF 10V K	
C6301	NQR0450-001X	EMI FILTER	0.022uF 50V M	
C6302	NCB30JK-105X	C CAPACITOR	1uF 6.3V K	
C6303	NCBA1AK-104W	C CAPACITOR	0.1uF 10V K	
C6305	NCB21AK-225X	C CAPACITOR	2.2uF 10V K	
C6306	NCBA1CK-103W	C CAPACITOR	0.01uF 16V K	
C6307	NCB31AK-474X	C CAPACITOR	0.47uF 10V K	
C6308	NCBA1AK-104W	C CAPACITOR	0.1uF 10V K	
C6309	NDCA1HJ-101W	C CAPACITOR	100pF 50V J	
C6310	NCBA1AK-104W	C CAPACITOR	0.1uF 10V K	
C6311	NCB31EK-473X	C CAPACITOR	0.047uF 25V K	
C6313	NDCA1HJ-101W	C CAPACITOR	100pF 50V J	

⚠ Symbol No.	Part No.	Part Name	Description	Local
C6314	NDCA1HJ-101W	C CAPACITOR	100pF 50V J	
C6315	NDC31HJ-221X	C CAPACITOR	220pF 50V J	
C6316	NDCA1HJ-101W	C CAPACITOR	100pF 50V J	
C6317	NDCA1HJ-101W	C CAPACITOR	100pF 50V J	
C6318	NCB31EK-473X	C CAPACITOR	0.047uF 25V K	
C6319	NCB31EK-473X	C CAPACITOR	0.047uF 25V K	
C6320	NCJ11EK-106X-R	C CAPACITOR	10uF 25V	
C6321	NCF21HZ-105X	C CAPACITOR	1uF 50V Z	
C6322	NCF21HZ-105X	C CAPACITOR	1uF 50V Z	
C6323	NCJ11EK-106X-R	C CAPACITOR	10uF 25V	
C6324	NCJ11EK-106X-R	C CAPACITOR	10uF 25V	
C6325	NCJ11EK-106X-R	C CAPACITOR	10uF 25V	
C6326	NCJ11EK-106X-R	C CAPACITOR	10uF 25V	
C6327	NCJ11EK-106X-R	C CAPACITOR	10uF 25V	
C6328	NCB11CK-225X	C CAPACITOR	2.2uF 16V K	
C6329	NCB31HK-473X	C CAPACITOR	0.047uF 50V K	
C6330	NCB31HK-333X	C CAPACITOR	0.033uF 50V K	
C6331	NCZ1011-220X	C CAPACITOR	22pF	
C6332	NCB31HK-392X	C CAPACITOR	3900pF 50V K	
C6401	NCB31AK-474X	C CAPACITOR	0.47uF 10V K	
C6402	NCB31AK-474X	C CAPACITOR	0.47uF 10V K	
C6403	NCB31AK-474X	C CAPACITOR	0.47uF 10V K	
C6404	NCB31AK-474X	C CAPACITOR	0.47uF 10V K	
C6406	NCJ11EK-106X-R	C CAPACITOR	10uF 25V	
C6408	NCB31CK-105X	C CAPACITOR	1uF 16V K	
C6409	NCB31CK-104X	C CAPACITOR	0.1uF 16V K	
C6410	NCJ21CK-106X-R	C CAPACITOR	10uF 16V K	
C6412	NCB31CK-105X	C CAPACITOR	1uF 16V K	
C6413	NCBA1AK-104W	C CAPACITOR	0.1uF 10V K	
C6415	NCB31CK-104X	C CAPACITOR	0.1uF 16V K	
C6416	NCJ21CK-106X-R	C CAPACITOR	10uF 16V K	
C6417	NCBA1AK-104W	C CAPACITOR	0.1uF 10V K	
C6451	NCB31CK-104X	C CAPACITOR	0.1uF 16V K	
C6481	NQR0450-001X	EMI FILTER	0.022uF 50V M	
C6482	NQR0450-001X	EMI FILTER	0.022uF 50V M	
C6483	NCB31CK-104X	C CAPACITOR	0.1uF 16V K	
C6484	NCB31HK-104X	C CAPACITOR	0.1uF 50V K	
C6485	NCBA1AK-104W	C CAPACITOR	0.1uF 10V K	
C6486	NCBA1AK-104W	C CAPACITOR	0.1uF 10V K	
C6487	NBE41AM-476X	TA E CAPACITOR	47uF 10V M	
C6488	NBE20JM-476X	TA E CAPACITOR	47uF 6.3V M	
C6489	NCJ11EK-106X-R	C CAPACITOR	10uF 25V	
C6490	NCJ11EK-106X-R	C CAPACITOR	10uF 25V	
C6491	NCJ21CK-106X-R	C CAPACITOR	10uF 16V K	
C6501	NCBA1AK-104W	C CAPACITOR	0.1uF 10V K	
C6502	NCB31AK-105X	C CAPACITOR	1uF 10V K	792J,720J
C6502	NCB31HK-471X	C CAPACITOR	470pF 50V K	624UI,625U,625UT,625EU,626U,626UT,626EU,626A,720E,720EE,724UI,725U,725UN,725UT,725EU,726U,726UN,726UT,726EU,726A,728UF
C6503	NCBA1AK-104W	C CAPACITOR	0.1uF 10V K	
C6504	NCB31AK-105X	C CAPACITOR	1uF 10V K	792J,720J
C6504	NCB31HK-471X	C CAPACITOR	470pF 50V K	624UI,625U,625UT,625EU,626U,626UT,626EU,626A,720E,720EE,724UI,725U,725UN,725UT,725EU,726U,726UN,726UT,726EU,726A,728UF
C6505	NCBA1AK-104W	C CAPACITOR	0.1uF 10V K	
C6507	NCBA1AK-104W	C CAPACITOR	0.1uF 10V K	
C6508	NCB31AK-105X	C CAPACITOR	1uF 10V K	792J,720J
C6508	NCB31HK-471X	C CAPACITOR	470pF 50V K	624UI,625U,625UT,625EU,626U,626UT,626EU,626A,720E,720EE,724UI,725U,725UN,725UT,725EU,726U,726UN,726UT,726EU,726A,728UF

⚠ Symbol No.	Part No.	Part Name	Description	Local
C6509	NBE20JM-226X	TA E CAPACITOR	22uF 6.3V M	
C6510	NCBA1AK-104W	C CAPACITOR	0.1uF 10V K	
C6512	NCB20JK-106X	C CAPACITOR	10uF 6.3V K	
C6513	NCB20JK-106X	C CAPACITOR	10uF 6.3V K	
C6514	NCB20JK-106X	C CAPACITOR	10uF 6.3V K	
C6515	NBE40JM-476X	TA E CAPACITOR	47uF 6.3V M	
C6801	NCB20JK-475X	C CAPACITOR	4.7uF 6.3V K	
C6802	NCB31HK-104X	C CAPACITOR	0.1uF 50V K	
C6803	NCB31AK-474X	C CAPACITOR	0.47uF 10V K	
C6804	NCB31AK-474X	C CAPACITOR	0.47uF 10V K	
C6805	NCJ11EK-106X-R	C CAPACITOR	10uF 25V	
C6807	NCB31HK-102X	C CAPACITOR	1000pF 50V K	
C6808	NCB31HK-102X	C CAPACITOR	1000pF 50V K	
C6809	NDC31HJ-101X	C CAPACITOR	100pF 50V J	
C6810	NDC31HJ-101X	C CAPACITOR	100pF 50V J	
C6811	NDC31HJ-101X	C CAPACITOR	100pF 50V J	
C6812	NDC31HJ-101X	C CAPACITOR	100pF 50V J	
C6813	NCBA1HK-102W	C CAPACITOR	1000pF 50V K	
C6814	NCBA1HK-102W	C CAPACITOR	1000pF 50V K	
R601	NRSA6AJ-102W	MG RESISTOR	1kΩ 1/16W J	
R602	NRSA6AJ-102W	MG RESISTOR	1kΩ 1/16W J	
R603	NRSA6AJ-101W	MG RESISTOR	100Ω 1/16W J	
R604	NRSA6AJ-101W	MG RESISTOR	100Ω 1/16W J	
R605	NRSA6AJ-101W	MG RESISTOR	100Ω 1/16W J	
R606	NRSA6AJ-102W	MG RESISTOR	1kΩ 1/16W J	
R607	NRSA6AJ-102W	MG RESISTOR	1kΩ 1/16W J	
R608	NRSA6AJ-102W	MG RESISTOR	1kΩ 1/16W J	
R609	NRSA6AJ-102W	MG RESISTOR	1kΩ 1/16W J	
R610	NRSA6AJ-102W	MG RESISTOR	1kΩ 1/16W J	
R611	NRSA6AJ-102W	MG RESISTOR	1kΩ 1/16W J	
R612	NRSA6AJ-101W	MG RESISTOR	100Ω 1/16W J	
R613	NRSA6AJ-101W	MG RESISTOR	100Ω 1/16W J	
R614	NRSA6AJ-102W	MG RESISTOR	1kΩ 1/16W J	
R616	NRSA6AJ-102W	MG RESISTOR	1kΩ 1/16W J	
R617	NRSA6AJ-102W	MG RESISTOR	1kΩ 1/16W J	
R618	NRSA6AJ-101W	MG RESISTOR	100Ω 1/16W J	
R619	NRSA6AJ-101W	MG RESISTOR	100Ω 1/16W J	
R620	NRSA6AJ-0R0W	MG RESISTOR	0Ω 1/16W J	
R621	NRSA6AJ-102W	MG RESISTOR	1kΩ 1/16W J	
R622	NRSA6AJ-102W	MG RESISTOR	1kΩ 1/16W J	
R623	NRSA6AJ-0R0W	MG RESISTOR	0Ω 1/16W J	
R625	NRSA6AJ-101W	MG RESISTOR	100Ω 1/16W J	
R626	NRSA6AJ-101W	MG RESISTOR	100Ω 1/16W J	
R627	NRSA6AJ-101W	MG RESISTOR	100Ω 1/16W J	
R628	NRSA6AJ-101W	MG RESISTOR	100Ω 1/16W J	
R629	NRSA6AJ-102W	MG RESISTOR	1kΩ 1/16W J	
R630	NRSA6AJ-102W	MG RESISTOR	1kΩ 1/16W J	
R631	NRSA6AJ-102W	MG RESISTOR	1kΩ 1/16W J	
R632	NRSA6AJ-102W	MG RESISTOR	1kΩ 1/16W J	
R633	NRSA6AJ-102W	MG RESISTOR	1kΩ 1/16W J	
R634	NRSA6AJ-101W	MG RESISTOR	100Ω 1/16W J	
R635	NRSA6AJ-101W	MG RESISTOR	100Ω 1/16W J	
R636	NRSA6AJ-0R0W	MG RESISTOR	0Ω 1/16W J	
R637	NRSA6AJ-473W	MG RESISTOR	47kΩ 1/16W J	
R638	NRSA6AJ-102W	MG RESISTOR	1kΩ 1/16W J	
R639	NRSA6AJ-102W	MG RESISTOR	1kΩ 1/16W J	
R640	NRSA6AJ-0R0W	MG RESISTOR	0Ω 1/16W J	
R641	NRSA6AJ-101W	MG RESISTOR	100Ω 1/16W J	
R642	NRSA6AJ-101W	MG RESISTOR	100Ω 1/16W J	
R643	NRSA6AJ-103W	MG RESISTOR	10kΩ 1/16W J	
R646	NRSA6AJ-752W	MG RESISTOR	7.5kΩ 1/16W J	
R647	NRSA6AJ-752W	MG RESISTOR	7.5kΩ 1/16W J	
R648	NRSA6AJ-474W	MG RESISTOR	470kΩ 1/16W J	
R649	NRSA6AJ-473W	MG RESISTOR	47kΩ 1/16W J	
R650	NRSA6AJ-333W	MG RESISTOR	33kΩ 1/16W J	
R652	NRSA6AJ-473W	MG RESISTOR	47kΩ 1/16W J	
R653	NRSA6AJ-473W	MG RESISTOR	47kΩ 1/16W J	
R654	NRSA6AJ-474W	MG RESISTOR	470kΩ 1/16W J	
R655	NRSA6AJ-0R0W	MG RESISTOR	0Ω 1/16W J	
R656	NRSA63J-0R0X	MG RESISTOR	0Ω 1/10W J	
R657	NRSA63J-0R0X	MG RESISTOR	0Ω 1/10W J	
R658	NRSA6AJ-474W	MG RESISTOR	470kΩ 1/16W J	
R659	NRSA6AJ-473W	MG RESISTOR	47kΩ 1/16W J	
R660	NRSA63J-0R0X	MG RESISTOR	0Ω 1/10W J	
R661	NRSA63J-0R0X	MG RESISTOR	0Ω 1/10W J	
R662	NRSA63J-0R0X	MG RESISTOR	0Ω 1/10W J	
R663	NRSA63J-0R0X	MG RESISTOR	0Ω 1/10W J	

⚠ Symbol No.	Part No.	Part Name	Description	Local
R664	NRSA63J-0R0X	MG RESISTOR	0Ω 1/10W J	
R665	NRSA63J-0R0X	MG RESISTOR	0Ω 1/10W J	
R671	NRSA6AJ-272W	MG RESISTOR	2.7kΩ 1/16W J	
R672	NRSA6AJ-272W	MG RESISTOR	2.7kΩ 1/16W J	
R673	NRSA6AJ-272W	MG RESISTOR	2.7kΩ 1/16W J	
R674	NRSA6AJ-272W	MG RESISTOR	2.7kΩ 1/16W J	
R675	NRSA6AJ-512W	MG RESISTOR	5.1kΩ 1/16W J	
R676	NRSA6AJ-512W	MG RESISTOR	5.1kΩ 1/16W J	
R677	NRSA6AJ-0R0W	MG RESISTOR	0Ω 1/16W J	
R678	NRSA6AJ-473W	MG RESISTOR	47kΩ 1/16W J	
R679	NRSA63J-0R0X	MG RESISTOR	0Ω 1/10W J	
R680	NRSA63J-0R0X	MG RESISTOR	0Ω 1/10W J	
R6002	NRSA6AJ-0R0W	MG RESISTOR	0Ω 1/16W J	
R6005	NRSA6AJ-680W	MG RESISTOR	68Ω 1/16W J	
R6006	NRSA6AJ-680W	MG RESISTOR	68Ω 1/16W J	
R6007	NRSA6AJ-680W	MG RESISTOR	68Ω 1/16W J	
R6008	NRSA6AJ-0R0W	MG RESISTOR	0Ω 1/16W J	
R6009	NRSA6AJ-330W	MG RESISTOR	33Ω 1/16W J	
R6010	NRSA6AJ-103W	MG RESISTOR	10kΩ 1/16W J	
R6011	NRSA6AJ-103W	MG RESISTOR	10kΩ 1/16W J	
R6013	NRSA6AJ-101W	MG RESISTOR	100Ω 1/16W J	
R6014	NRSA6AJ-101W	MG RESISTOR	100Ω 1/16W J	
R6015	NRSA6AJ-101W	MG RESISTOR	100Ω 1/16W J	
R6016	NRSA6AJ-103W	MG RESISTOR	10kΩ 1/16W J	
R6017	NRSA6AJ-101W	MG RESISTOR	100Ω 1/16W J	
R6018	NRSA6AJ-101W	MG RESISTOR	100Ω 1/16W J	
R6019	NRSA6AJ-101W	MG RESISTOR	100Ω 1/16W J	
R6020	NRSA6AJ-101W	MG RESISTOR	100Ω 1/16W J	
R6021	NRSA6AJ-101W	MG RESISTOR	100Ω 1/16W J	
R6022	NRSA6AJ-330W	MG RESISTOR	33Ω 1/16W J	
R6023	NRSA6AJ-101W	MG RESISTOR	100Ω 1/16W J	
R6024	NRSA6AJ-101W	MG RESISTOR	100Ω 1/16W J	
R6025	NRSA6AJ-101W	MG RESISTOR	100Ω 1/16W J	
R6026	NRSA6AJ-101W	MG RESISTOR	100Ω 1/16W J	
R6027	NRSA6AJ-101W	MG RESISTOR	100Ω 1/16W J	
R6028	NRSA6AJ-223W	MG RESISTOR	22kΩ 1/16W J	
R6029	NRSA6AJ-101W	MG RESISTOR	100Ω 1/16W J	
R6030	NRSA6AJ-0R0W	MG RESISTOR	0Ω 1/16W J	
R6031	NRSA6AJ-102W	MG RESISTOR	1kΩ 1/16W J	
R6032	NRSA6AJ-101W	MG RESISTOR	100Ω 1/16W J	
R6034	NRSA6AJ-0R0W	MG RESISTOR	0Ω 1/16W J	
R6036	NRSA6AJ-103W	MG RESISTOR	10kΩ 1/16W J	
R6037	NRSA6AJ-0R0W	MG RESISTOR	0Ω 1/16W J	
R6038	NRSA6AJ-0R0W	MG RESISTOR	0Ω 1/16W J	
R6043	NRSA6AJ-0R0W	MG RESISTOR	0Ω 1/16W J	
R6044	NRSA6AJ-0R0W	MG RESISTOR	0Ω 1/16W J	
R6048	NRSA6AJ-0R0W	MG RESISTOR	0Ω 1/16W J	
R6049	NRSA6AJ-0R0W	MG RESISTOR	0Ω 1/16W J	
R6050	NRSA6AJ-0R0W	MG RESISTOR	0Ω 1/16W J	
R6057	NRSA6AD-123W	MG RESISTOR	12kΩ 1/16W D	
R6058	NRSA6AJ-0R0W	MG RESISTOR	0Ω 1/16W J	
R6059	NRSA6AJ-752W	MG RESISTOR	7.5kΩ 1/16W J	
R6060	NRSA6AJ-622W	MG RESISTOR	6.2kΩ 1/16W J	
R6061	NRSA6AJ-272W	MG RESISTOR	2.7kΩ 1/16W J	
R6062	NRSA6AJ-471W	MG RESISTOR	470Ω 1/16W J	
R6063	NRSA6AJ-471W	MG RESISTOR	470Ω 1/16W J	
R6064	NRSA6AJ-0R0W	MG RESISTOR	0Ω 1/16W J	
R6065	NRSA6AJ-0R0W	MG RESISTOR	0Ω 1/16W J	
R6066	NRSA6AJ-103W	MG RESISTOR	10kΩ 1/16W J	
R6068	NRSA6AJ-681W	MG RESISTOR	680Ω 1/16W J	
R6069	NRSA6AJ-0R0W	MG RESISTOR	0Ω 1/16W J	
R6070	NRSA6AJ-0R0W	MG RESISTOR	0Ω 1/16W J	
R6071	NRSA6AJ-0R0W	MG RESISTOR	0Ω 1/16W J	
R6072	NRSA6AJ-103W	MG RESISTOR	10kΩ 1/16W J	
R6074	NRSA6AJ-0R0W	MG RESISTOR	0Ω 1/16W J	
R6076	NRSA6AJ-0R0W	MG RESISTOR	0Ω 1/16W J	
R6077	NRSA6AJ-0R0W	MG RESISTOR	0Ω 1/16W J	
R6078	NRSA6AJ-103W	MG RESISTOR	10kΩ 1/16W J	
R6079	NRSA6AJ-220W	MG RESISTOR	22Ω 1/16W J	
R6080	NRSA6AJ-220W	MG RESISTOR	22Ω 1/16W J	
R6081	NRSA6AJ-220W	MG RESISTOR	22Ω 1/16W J	
R6082	NRSA6AJ-220W	MG RESISTOR	22Ω 1/16W J	
R6083	NRSA6AJ-220W	MG RESISTOR	22Ω 1/16W J	
R6084	NRSA6AJ-220W	MG RESISTOR	22Ω 1/16W J	
R6085	NRSA6AJ-220W	MG RESISTOR	22Ω 1/16W J	
R6086	NRSA6AJ-101W	MG RESISTOR	100Ω 1/16W J	
R6087	NRSA6AJ-330W	MG RESISTOR	33Ω 1/16W J	
R6089	NRSA6AJ-0R0W	MG RESISTOR	0Ω 1/16W J	

⚠ Symbol No.	Part No.	Part Name	Description	Local
R6091	NRSA6AJ-101W	MG RESISTOR	100Ω 1/16W J	
R6092	NRSA6AJ-330W	MG RESISTOR	33Ω 1/16W J	
R6093	NRSA6AJ-0R0W	MG RESISTOR	0Ω 1/16W J	
R6097	NRSA6AJ-330W	MG RESISTOR	33Ω 1/16W J	
R6098	NRSA6AJ-330W	MG RESISTOR	33Ω 1/16W J	
R6099	NRSA6AJ-330W	MG RESISTOR	33Ω 1/16W J	
R6100	NRSA6AJ-330W	MG RESISTOR	33Ω 1/16W J	
R6101	NRSA6AJ-221W	MG RESISTOR	220Ω 1/16W J	
R6102	NRSA6AJ-221W	MG RESISTOR	220Ω 1/16W J	
R6103	NRSA6AJ-471W	MG RESISTOR	470Ω 1/16W J	
R6105	NRSA6AJ-391W	MG RESISTOR	390Ω 1/16W J	
R6106	NRSA6AJ-152W	MG RESISTOR	1.5kΩ 1/16W J	
R6113	NRSA6AJ-103W	MG RESISTOR	10kΩ 1/16W J	
R6114	NRSA6AJ-103W	MG RESISTOR	10kΩ 1/16W J	
R6115	NRSA6AJ-103W	MG RESISTOR	10kΩ 1/16W J	
R6116	NRSA6AJ-103W	MG RESISTOR	10kΩ 1/16W J	
R6117	NRSA6AJ-103W	MG RESISTOR	10kΩ 1/16W J	
R6118	NRSA6AJ-0R0W	MG RESISTOR	0Ω 1/16W J	
R6201	NRSA6AJ-102W	MG RESISTOR	1kΩ 1/16W J	
R6202	NRSA6AJ-102W	MG RESISTOR	1kΩ 1/16W J	
R6212	NRSA6AJ-0R0W	MG RESISTOR	0Ω 1/16W J	
R6213	NRS181J-0R0X	MG RESISTOR	0Ω 1/8W J	
R6214	NRSA02J-0R0X	MG RESISTOR	0Ω 1/10W J	
R6215	NRSA6AJ-0R0W	MG RESISTOR	0Ω 1/16W J	
R6301	NRSA6AJ-682W	MG RESISTOR	6.8kΩ 1/16W J	
R6303	NRSA6AJ-224W	MG RESISTOR	220kΩ 1/16W J	
R6304	NRSA6AJ-104W	MG RESISTOR	100kΩ 1/16W J	
R6305	NRSA6AJ-0R0W	MG RESISTOR	0Ω 1/16W J	
R6306	NRSA63J-515X	MG RESISTOR	5.1MΩ 1/16W J	
R6307	NRSA63J-184X	MG RESISTOR	180kΩ 1/16W J	
R6308	NRSA63J-0R0X	MG RESISTOR	0Ω 1/10W J	
R6309	NRSA63J-333X	MG RESISTOR	33kΩ 1/16W J	
R6310	NRSA6AJ-470W	MG RESISTOR	47Ω 1/16W J	
R6311	NRSA6AJ-470W	MG RESISTOR	47Ω 1/16W J	
R6312	NRSA63J-823X	MG RESISTOR	82kΩ 1/16W J	
R6313	NRSA63J-274X	MG RESISTOR	270kΩ 1/16W J	
R6314	NRSA6AJ-470W	MG RESISTOR	47Ω 1/16W J	
R6315	NRSA6AJ-470W	MG RESISTOR	47Ω 1/16W J	
R6316	NRSA6AJ-512W	MG RESISTOR	5.1kΩ 1/16W J	
R6317	NRSA6AJ-512W	MG RESISTOR	5.1kΩ 1/16W J	
R6318	NRSA63J-105X	MG RESISTOR	1MΩ 1/16W J	
R6320	NRSA63J-0R0X	MG RESISTOR	0Ω 1/10W J	
R6321	NRSA63J-391X	MG RESISTOR	390Ω 1/16W J	
R6326	NRSA6AJ-513W	MG RESISTOR	51kΩ 1/16W J	
R6327	NRSA6AJ-473W	MG RESISTOR	47kΩ 1/16W J	
R6329	NRSA6AJ-562W	MG RESISTOR	5.6kΩ 1/16W J	
R6401	NRSA6AJ-683W	MG RESISTOR	68kΩ 1/16W J	
R6402	NRSA6AJ-683W	MG RESISTOR	68kΩ 1/16W J	
R6403	NRSA6AJ-683W	MG RESISTOR	68kΩ 1/16W J	
R6404	NRSA6AJ-683W	MG RESISTOR	68kΩ 1/16W J	
R6405	NRSA6AJ-104W	MG RESISTOR	100kΩ 1/16W J	
R6408	NRSA6AJ-104W	MG RESISTOR	100kΩ 1/16W J	
R6411	NRSA6AJ-103W	MG RESISTOR	10kΩ 1/16W J	
R6412	NRSA6AJ-103W	MG RESISTOR	10kΩ 1/16W J	
R6413	NRSA6AJ-103W	MG RESISTOR	10kΩ 1/16W J	
R6414	NRSA6AJ-223W	MG RESISTOR	22kΩ 1/16W J	
R6415	NRSA6AJ-103W	MG RESISTOR	10kΩ 1/16W J	
R6416	NRSA6AJ-153W	MG RESISTOR	15kΩ 1/16W J	
R6417	NRSA6AJ-103W	MG RESISTOR	10kΩ 1/16W J	
R6418	NRSA6AJ-103W	MG RESISTOR	10kΩ 1/16W J	
R6419	NRSA6AJ-103W	MG RESISTOR	10kΩ 1/16W J	
R6420	NRSA6AJ-103W	MG RESISTOR	10kΩ 1/16W J	
R6421	NRSA6AJ-103W	MG RESISTOR	10kΩ 1/16W J	
R6422	NRSA6AJ-103W	MG RESISTOR	10kΩ 1/16W J	
R6423	NRSA6AJ-273W	MG RESISTOR	27kΩ 1/16W J	
R6424	NRSA6AJ-392W	MG RESISTOR	3.9kΩ 1/16W J	
R6426	NRSA6AJ-103W	MG RESISTOR	10kΩ 1/16W J	
R6427	NRSA6AJ-103W	MG RESISTOR	10kΩ 1/16W J	
R6428	NRSA6AJ-101W	MG RESISTOR	100Ω 1/16W J	
R6429	NRSA6AJ-103W	MG RESISTOR	10kΩ 1/16W J	
R6430	NRSA6AJ-103W	MG RESISTOR	10kΩ 1/16W J	
R6431	NRSA63J-390X	MG RESISTOR	39Ω 1/16W J	
R6432	NRSA6AJ-2R2W	MG RESISTOR	2.2Ω 1/16W J	
R6433	NRSA6AJ-2R2W	MG RESISTOR	2.2Ω 1/16W J	
R6434	NRSA63J-390X	MG RESISTOR	39Ω 1/16W J	
R6435	NRSA6AJ-100W	MG RESISTOR	10Ω 1/16W J	
R6452	NRSA6AJ-0R0W	MG RESISTOR	0Ω 1/16W J	
R6454	NRSA6AJ-0R0W	MG RESISTOR	0Ω 1/16W J	

⚠ Symbol No.	Part No.	Part Name	Description	Local
R6456	NRSA6AJ-0R0W	MG RESISTOR	0Ω 1/16W J	
R6458	NRSA6AJ-0R0W	MG RESISTOR	0Ω 1/16W J	
R6461	NRSA6AD-240W	MG RESISTOR	24Ω 1/16W D	
R6462	NRSA6AD-221W	MG RESISTOR	220Ω 1/16W D	
R6463	NRSA6AD-820W	MG RESISTOR	82Ω 1/16W D	
R6464	NRSA6AD-470W	MG RESISTOR	47Ω 1/16W D	
R6465	NRSA6AD-390W	MG RESISTOR	39Ω 1/16W D	
R6466	NRSA6AD-430W	MG RESISTOR	43Ω 1/16W D	
R6467	NRSA6AD-470W	MG RESISTOR	47Ω 1/16W D	
R6468	NRSA6AD-680W	MG RESISTOR	68Ω 1/16W D	
R6469	NRSA6AD-161W	MG RESISTOR	160Ω 1/16W D	
R6470	NRSA6AD-201W	MG RESISTOR	200Ω 1/16W D	
R6471	NRSA6AD-100W	MG RESISTOR	10Ω 1/16W D	
R6472	NRSA6AD-100W	MG RESISTOR	10Ω 1/16W D	
R6473	NRSA6AJ-0R0W	MG RESISTOR	0Ω 1/16W J	
R6477	NRSA6AJ-0R0W	MG RESISTOR	0Ω 1/16W J	
R6478	NRSA6AJ-0R0W	MG RESISTOR	0Ω 1/16W J	
R6479	NRSA6AJ-0R0W	MG RESISTOR	0Ω 1/16W J	
R6481	NRSA6AJ-0R0W	MG RESISTOR	0Ω 1/16W J	
R6483	NRSA6AJ-0R0W	MG RESISTOR	0Ω 1/16W J	
R6485	NRSA6AJ-0R0W	MG RESISTOR	0Ω 1/16W J	
R6487	NRSA6AJ-0R0W	MG RESISTOR	0Ω 1/16W J	
R6488	NRSA6AJ-0R0W	MG RESISTOR	0Ω 1/16W J	
R6491	NRSA6AJ-0R0W	MG RESISTOR	0Ω 1/16W J	
R6492	NRSA6AJ-0R0W	MG RESISTOR	0Ω 1/16W J	
R6493	NRSA6AJ-0R0W	MG RESISTOR	0Ω 1/16W J	
R6494	NRSA6AJ-0R0W	MG RESISTOR	0Ω 1/16W J	
R6495	NRSA6AJ-0R0W	MG RESISTOR	0Ω 1/16W J	
R6496	NRSA6AJ-0R0W	MG RESISTOR	0Ω 1/16W J	
R6497	NRSA6AJ-0R0W	MG RESISTOR	0Ω 1/16W J	
R6498	NRSA6AJ-0R0W	MG RESISTOR	0Ω 1/16W J	
R6502	NRSA6AJ-103W	MG RESISTOR	10kΩ 1/16W J	
R6701	NRSA63J-101X	MG RESISTOR	100Ω 1/16W J	792J,720J,720E,720EE,724UI,725U,725UN,725UT,725EU,726U,726UN,726UT,726EU,726A,728UF
R6701	NRSA63J-331X	MG RESISTOR	330Ω 1/16W J	624UI,625U,625UT,625EU,626U,626UT,626EU,626A
R6702	NRSA63J-562X	MG RESISTOR	5.6kΩ 1/16W J	792J,720J,720E,720EE,724UI,725U,725UN,725UT,725EU,726U,726UN,726UT,726EU,726A,728UF
R6702	NRSA63J-432X	MG RESISTOR	4.3kΩ 1/16W J	624UI,625U,625UT,625EU,626U,626UT,626EU,626A
R6703	NRSA63J-562X	MG RESISTOR	5.6kΩ 1/16W J	792J,720J,720E,720EE,724UI,725U,725UN,725UT,725EU,726U,726UN,726UT,726EU,726A,728UF
R6703	NRSA63J-432X	MG RESISTOR	4.3kΩ 1/16W J	624UI,625U,625UT,625EU,626U,626UT,626EU,626A
R6704	NRSA63J-562X	MG RESISTOR	5.6kΩ 1/16W J	792J,720J,720E,720EE,724UI,725U,725UN,725UT,725EU,726U,726UN,726UT,726EU,726A,728UF
R6704	NRSA63J-432X	MG RESISTOR	4.3kΩ 1/16W J	624UI,625U,625UT,625EU,626U,626UT,626EU,626A
R6706	NRSA02J-222X	MG RESISTOR	2.2kΩ 1/10W J	
R6707	NRSA02J-222X	MG RESISTOR	2.2kΩ 1/10W J	

⚠ Symbol No.	Part No.	Part Name	Description	Local
R6708	NRSA63J-182X	MG RESISTOR	1.8kΩ 1/16W J	792J,720J,720E,720EE,724UI,725U,725UN,725UT,725EU,726U,726UN,726UT,726EU,726A,728UF
R6708	NRSA63J-302X	MG RESISTOR	3kΩ 1/16W J	624UI,625U,625UT,625EU,626U,626UT,626EU,626A
R6709	NRSA63J-242X	MG RESISTOR	2.4kΩ 1/16W J	792J,720J,720E,720EE,724UI,725U,725UN,725UT,725EU,726U,726UN,726UT,726EU,726A,728UF
R6709	NRSA63J-332X	MG RESISTOR	3.3kΩ 1/16W J	624UI,625U,625UT,625EU,626U,626UT,626EU,626A
R6710	NRSA63J-182X	MG RESISTOR	1.8kΩ 1/16W J	792J,720J,720E,720EE,724UI,725U,725UN,725UT,725EU,726U,726UN,726UT,726EU,726A,728UF
R6710	NRSA63J-302X	MG RESISTOR	3kΩ 1/16W J	624UI,625U,625UT,625EU,626U,626UT,626EU,626A
R6711	NRSA63J-182X	MG RESISTOR	1.8kΩ 1/16W J	792J,720J,720E,720EE,724UI,725U,725UN,725UT,725EU,726U,726UN,726UT,726EU,726A,728UF
R6711	NRSA63J-302X	MG RESISTOR	3kΩ 1/16W J	624UI,625U,625UT,625EU,626U,626UT,626EU,626A
R6712	NRSA63J-242X	MG RESISTOR	2.4kΩ 1/16W J	792J,720J,720E,720EE,724UI,725U,725UN,725UT,725EU,726U,726UN,726UT,726EU,726A,728UF
R6712	NRSA63J-332X	MG RESISTOR	3.3kΩ 1/16W J	624UI,625U,625UT,625EU,626U,626UT,626EU,626A
R6713	NRSA63J-562X	MG RESISTOR	5.6kΩ 1/16W J	
R6714	NRSA63J-473X	MG RESISTOR	47kΩ 1/16W J	
R6715	NRSA63J-562X	MG RESISTOR	5.6kΩ 1/16W J	
R6716	NRSA63J-473X	MG RESISTOR	47kΩ 1/16W J	
R6717	NRSA02J-222X	MG RESISTOR	2.2kΩ 1/10W J	
R6718	NRSA63J-242X	MG RESISTOR	2.4kΩ 1/16W J	792J,720J,720E,720EE,724UI,725U,725UN,725UT,725EU,726U,726UN,726UT,726EU,726A,728UF
R6718	NRSA63J-332X	MG RESISTOR	3.3kΩ 1/16W J	624UI,625U,625UT,625EU,626U,626UT,626EU,626A
R6719	NRSA63J-242X	MG RESISTOR	2.4kΩ 1/16W J	792J,720J,720E,720EE,724UI,725U,725UN,725UT,725EU,726U,726UN,726UT,726EU,726A,728UF
R6719	NRSA63J-332X	MG RESISTOR	3.3kΩ 1/16W J	624UI,625U,625UT,625EU,626U,626UT,626EU,626A

⚠ Symbol No.	Part No.	Part Name	Description	Local
R6720	NRSA63J-152X	MG RESISTOR	1.5kΩ 1/16W J	792J,720J,720E,720EE,724UI,725U,725UN,725UT,725EU,726U,726UN,726UT,726EU,726A,728UF
R6721	NRSA63J-182X	MG RESISTOR	1.8kΩ 1/16W J	792J,720J,720E,720EE,724UI,725U,725UN,725UT,725EU,726U,726UN,726UT,726EU,726A,728UF
R6722	NRSA63J-182X	MG RESISTOR	1.8kΩ 1/16W J	792J,720J,720E,720EE,724UI,725U,725UN,725UT,725EU,726U,726UN,726UT,726EU,726A,728UF
R6723	NRSA63J-152X	MG RESISTOR	1.5kΩ 1/16W J	792J,720J,720E,720EE,724UI,725U,725UN,725UT,725EU,726U,726UN,726UT,726EU,726A,728UF
R6724	NRSA02J-222X	MG RESISTOR	2.2kΩ 1/10W J	
R6725	NRSA63J-182X	MG RESISTOR	1.8kΩ 1/16W J	792J,720J,720E,720EE,724UI,725U,725UN,725UT,725EU,726U,726UN,726UT,726EU,726A,728UF
R6725	NRSA63J-302X	MG RESISTOR	3kΩ 1/16W J	624UI,625U,625UT,625EU,626U,626UT,626EU,626A
R6801	NRSA63J-0R0X	MG RESISTOR	0Ω 1/10W J	
R6802	NRSA63J-0R0X	MG RESISTOR	0Ω 1/10W J	
R6803	NRSA63J-0R0X	MG RESISTOR	0Ω 1/10W J	
R6804	NRSA63J-0R0X	MG RESISTOR	0Ω 1/10W J	
R6817	NRSA6AJ-470W	MG RESISTOR	47Ω 1/16W J	
R6818	NRSA6AJ-101W	MG RESISTOR	100Ω 1/16W J	
R6819	NRSA6AJ-683W	MG RESISTOR	68kΩ 1/16W J	
R6820	NRSA6AJ-683W	MG RESISTOR	68kΩ 1/16W J	
R6822	NRSA6AJ-103W	MG RESISTOR	10kΩ 1/16W J	
R6823	NRSA6AJ-472W	MG RESISTOR	4.7kΩ 1/16W J	
R6824	NRSA6AJ-182W	MG RESISTOR	1.8kΩ 1/16W J	
R6826	NRSA6AJ-332W	MG RESISTOR	3.3kΩ 1/16W J	
R6827	NRSA6AJ-223W	MG RESISTOR	22kΩ 1/16W J	
R6828	NRSA6AJ-332W	MG RESISTOR	3.3kΩ 1/16W J	
R6829	NRSA6AJ-223W	MG RESISTOR	22kΩ 1/16W J	
R6830	NRSA63J-222X	MG RESISTOR	2.2kΩ 1/16W J	
R6832	NRSA6AJ-332W	MG RESISTOR	3.3kΩ 1/16W J	
R6833	NRSA6AJ-223W	MG RESISTOR	22kΩ 1/16W J	
R6834	NRSA6AJ-222W	MG RESISTOR	2.2kΩ 1/16W J	
R6836	NRSA6AJ-332W	MG RESISTOR	3.3kΩ 1/16W J	
R6837	NRSA6AJ-223W	MG RESISTOR	22kΩ 1/16W J	
R8501	NRSA63J-751X	MG RESISTOR	750Ω 1/16W J	
R8503	NRSA63J-393X	MG RESISTOR	39kΩ 1/16W J	
R8504	NRSA63J-333X	MG RESISTOR	33kΩ 1/16W J	
R8505	NRSA63J-333X	MG RESISTOR	33kΩ 1/16W J	
R8507	NRSA63J-682X	MG RESISTOR	6.8kΩ 1/16W J	
R8508	NRSA63J-222X	MG RESISTOR	2.2kΩ 1/16W J	
R8509	NRSA63J-102X	MG RESISTOR	1kΩ 1/16W J	
R8510	NRSA63J-151X	MG RESISTOR	150Ω 1/16W J	
RA601	NRZ0034-680W	NET RESISTOR	68Ω 1/32W J x4	
RA602	NRZ0034-680W	NET RESISTOR	68Ω 1/32W J x4	
RA603	NRZ0034-680W	NET RESISTOR	68Ω 1/32W J x4	
RA604	NRZ0034-680W	NET RESISTOR	68Ω 1/32W J x4	
RA605	NRZ0034-680W	NET RESISTOR	68Ω 1/32W J x4	
RA606	NRZ0034-680W	NET RESISTOR	68Ω 1/32W J x4	
RA607	NRZ0034-680W	NET RESISTOR	68Ω 1/32W J x4	
RA608	NRZ0034-680W	NET RESISTOR	68Ω 1/32W J x4	
RA609	NRZ0034-680W	NET RESISTOR	68Ω 1/32W J x4	
RA610	NRZ0034-330W	NET RESISTOR	33Ω 1/32W J x4	
RA611	NRZ0034-330W	NET RESISTOR	33Ω 1/32W J x4	
RA612	NRZ0034-330W	NET RESISTOR	33Ω 1/32W J x4	
RA613	NRZ0034-330W	NET RESISTOR	33Ω 1/32W J x4	

⚠ Symbol No.	Part No.	Part Name	Description	Local
RA614	NRZ0034-330W	NET RESISTOR	33Ω 1/32W J x4	
RA615	NRZ0034-330W	NET RESISTOR	33Ω 1/32W J x4	
RA616	NRZ0034-330W	NET RESISTOR	33Ω 1/32W J x4	
RA617	NRZ0034-330W	NET RESISTOR	33Ω 1/32W J x4	
RA618	NRZ0034-330W	NET RESISTOR	33Ω 1/32W J x4	
RA619	NRZ0034-330W	NET RESISTOR	33Ω 1/32W J x4	
RA620	NRZ0034-330W	NET RESISTOR	33Ω 1/32W J x4	
RA621	NRZ0034-330W	NET RESISTOR	33Ω 1/32W J x4	
RA622	NRZ0034-330W	NET RESISTOR	33Ω 1/32W J x4	
L601	NQL382M-100X	COIL	10uH M	
L6001	NQL382M-220X	COIL	22uH M	
L6004	NQL382M-220X	COIL	22uH M	
L6005	NQL085J-470X	COIL	47uH J	
L6301	NQL382M-470X	COIL	47uH M	
L6302	NQL52EM-100X	COIL	10uH M	
L6401	NQL79GM-220X	COIL	22uH M	
L6402	NQL79GM-220X	COIL	22uH M	
L6481	NQL382M-470X	COIL	47uH M	
L6482	NQL382M-470X	COIL	47uH M	
⚠ T6301	NQR0636-001	C FL TRANSF		
CN601	QGF0523F2-16W	CONNECTOR	FFC/FPC (1-16)	
CN602	QGF1039F2-04X	CONNECTOR	FFC/FPC (1-4)	
CN603	QGF0522F3-45W	CONNECTOR	FFC/FPC (1-45)	
CN606	QGF0534F2-60X	CONNECTOR	FFC/FPC (1-60)	
CN607	QGA8002F1-02X	CONNECTOR	W-B (1-2)	
CN671	QGF0545F3-16X	CONNECTOR	FFC/FPC (1-16)	
CN851	QGA1002C1-06X	CONNECTOR	W-B (1-6)	
CN852	QGA1002C1-02X	CONNECTOR	W-B (1-2)	
S671	NSW0312-001X	TACT SWITCH		
S672	NSW0312-001X	TACT SWITCH		
S673	NSW0312-001X	TACT SWITCH		
S674	NSW0312-001X	TACT SWITCH		
S675	NSW0312-001X	TACT SWITCH		
S676	NSW0312-001X	TACT SWITCH		
S677	NSW0312-001X	TACT SWITCH		
S678	NSW0312-001X	TACT SWITCH		
S679	NSW0312-001X	TACT SWITCH		
S8501	NSW0225-001X	DETECT SWITCH		
S8502	NSW0126-001X	DETECT SWITCH		
X601	NAX0974-001X	CRYSTAL		
X6001	NAX0971-001X	CRYSTAL		
X6002	NAX0970-001X	CRYSTAL		

Front end board (Except 624,625,626ver.)

Block No. [0][3]

⚠ Symbol No.	Part No.	Part Name	Description	Local
IC1	BD8215EFV-X	IC		
IC3	MM3233CF-X	IC		
IC7	TC7PA53FU-X	IC		
IC8	MFI341S2162-X	IC		
IC301	MN2DS0018MA	IC		
IC302	MM1701CH-X	IC		
IC308	NJU6368PF1-X	IC		
IC398	VDG1368-D011AWS	IC(PROGRAMED)		
IC399	M12L128168A-7TG	IC(DIGITAL)		
IC399	or HY57V281620FTH	IC(DIGITAL)		
IC400	AK4387ET-X	IC		
IC481	BR24S32FVT-W-X	IC(DIGITAL)		
IC501	TC74LCX373FT-X	IC(DIGITAL)		

⚠ Symbol No.	Part No.	Part Name	Description	Local
IC502	TC74LCX373FT-X	IC(DIGITAL)		
Q2	RT1N141U-X	RANSISTOR		
Q4	2SD601A/R/-X	TRANSISTOR		
Q4 or	2SC3928A/R/-X	TRANSISTOR		
Q7	2SD601A/R/-X	TRANSISTOR		
Q7 or	2SC3928A/R/-X	TRANSISTOR		
Q8	2SA1774/R/-X	TRANSISTOR		
Q9	2SC4617/R/-X	TRANSISTOR		
Q101	2SB1424/R/-W	TRANSISTOR		
Q102	2SC4617/R/-X	TRANSISTOR		
Q103	2SB1424/R/-W	TRANSISTOR		
Q104	2SC4617/R/-X	TRANSISTOR		
Q105	2SC4617/R/-X	TRANSISTOR		
Q106	2SK3546J-X	MOS FET		
Q107	2SK3546J-X	MOS FET		
Q301	RT1N441U-X	DIGI TRANSISTOR		
Q302	RT1N441U-X	DIGI TRANSISTOR		
D6	AN1102W-6-X	IR LED		
D7	AN1102W-6-X	IR LED		
D9	PS1192HB-22-X	PHOTO TRANSISTOR		
D11	PS1192HB-22-X	PHOTO TRANSISTOR		
C2	NCB31CK-104X	C CAPACITOR	0.1uF 16V K	
C3	NCB31CK-104X	C CAPACITOR	0.1uF 16V K	
C4	NCB31CK-104X	C CAPACITOR	0.1uF 16V K	
C5	NCB31CK-104X	C CAPACITOR	0.1uF 16V K	
C6	NCB31CK-104X	C CAPACITOR	0.1uF 16V K	
C7	NCB31CK-104X	C CAPACITOR	0.1uF 16V K	
C8	NCB31CK-104X	C CAPACITOR	0.1uF 16V K	
C9	NCB31CK-104X	C CAPACITOR	0.1uF 16V K	
C11	NCB31CK-104X	C CAPACITOR	0.1uF 16V K	
C12	NCB31CK-104X	C CAPACITOR	0.1uF 16V K	
C13	NCB31CK-104X	C CAPACITOR	0.1uF 16V K	
C14	NCB31CK-104X	C CAPACITOR	0.1uF 16V K	
C15	NCB31CK-104X	C CAPACITOR	0.1uF 16V K	
C16	NCB31CK-104X	C CAPACITOR	0.1uF 16V K	
C17	NCB31CK-104X	C CAPACITOR	0.1uF 16V K	
C18	NCB31CK-104X	C CAPACITOR	0.1uF 16V K	
C19	NCB31CK-104X	C CAPACITOR	0.1uF 16V K	
C20	NCB31CK-104X	C CAPACITOR	0.1uF 16V K	
C21	NBE41AM-476X	TA E CAPACITOR	47uF 10V M	
C22	NBE41AM-476X	TA E CAPACITOR	47uF 10V M	
C23	NBE41AM-476X	TA E CAPACITOR	47uF 10V M	
C24	NCB31CK-104X	C CAPACITOR	0.1uF 16V K	
C25	NCB31CK-104X	C CAPACITOR	0.1uF 16V K	
C26	NCB31CK-104X	C CAPACITOR	0.1uF 16V K	
C31	NCB31HK-681X	C CAPACITOR	680pF 50V K	
C32	NCB31HK-561X	C CAPACITOR	560pF 50V K	
C48	NCB31CK-104X	C CAPACITOR	0.1uF 16V K	
C50	NCB31CK-104X	C CAPACITOR	0.1uF 16V K	
C51	NDC31HJ-4R0X	C CAPACITOR	4pF 50V J	
C52	NDC31HJ-4R0X	C CAPACITOR	4pF 50V J	
C60	NCB31HK-103X	C CAPACITOR	0.01uF 50V K	
C63	NBE40JM-476X	TA E CAPACITOR	47uF 6.3V M	
C65	NCB31CK-104X	C CAPACITOR	0.1uF 16V K	
C66	NCB31CK-104X	C CAPACITOR	0.1uF 16V K	
C67	NCB31HK-103X	C CAPACITOR	0.01uF 50V K	
C68	NCB31CK-104X	C CAPACITOR	0.1uF 16V K	
C69	NCB21CK-105X	C CAPACITOR	1uF 16V K	
C70	NCB31CK-104X	C CAPACITOR	0.1uF 16V K	
C71	NCB31CK-104X	C CAPACITOR	0.1uF 16V K	
C72	NCB31CK-105X	C CAPACITOR	1uF 16V K	
C73	NCB31CK-104X	C CAPACITOR	0.1uF 16V K	
C74	NCB31CK-104X	C CAPACITOR	0.1uF 16V K	
C75	NCB31CK-104X	C CAPACITOR	0.1uF 16V K	
C76	NCB31CK-104X	C CAPACITOR	0.1uF 16V K	
C77	NCB31CK-104X	C CAPACITOR	0.1uF 16V K	
C78	NCB31CK-104X	C CAPACITOR	0.1uF 16V K	
C79	NCB31CK-104X	C CAPACITOR	0.1uF 16V K	
C80	NCB21CK-105X	C CAPACITOR	1uF 16V K	
C81	NDC31HJ-120X	C CAPACITOR	12pF 50V J	
C82	NDC31HJ-150X	C CAPACITOR	15pF 50V J	
C83	NCB31CK-104X	C CAPACITOR	0.1uF 16V K	
C84	NCB31CK-333X	C CAPACITOR	0.033uF 16V K	
C85	NCB31CK-104X	C CAPACITOR	0.1uF 16V K	
C86	NCB31CK-104X	C CAPACITOR	0.1uF 16V K	

⚠ Symbol No.	Part No.	Part Name	Description	Local
C87	NCB31CK-104X	C CAPACITOR	0.1uF 16V K	
C88	NCB31CK-104X	C CAPACITOR	0.1uF 16V K	
C89	NCB31HK-183X	C CAPACITOR	0.018uF 50V K	
C90	NCB31HK-562X	C CAPACITOR	5600pF 50V K	
C91	NCB31CK-104X	C CAPACITOR	0.1uF 16V K	
C92	NCB21CK-105X	C CAPACITOR	1uF 16V K	
C93	NCB21CK-105X	C CAPACITOR	1uF 16V K	
C99	NCB31CK-104X	C CAPACITOR	0.1uF 16V K	
C100	NCB31CK-684X	C CAPACITOR	0.68uF 16V K	
C101	NCB31CK-104X	C CAPACITOR	0.1uF 16V K	
C102	NCB31CK-684X	C CAPACITOR	0.68uF 16V K	
C109	NCB21CK-105X	C CAPACITOR	1uF 16V K	
C113	NCB21CK-105X	C CAPACITOR	1uF 16V K	
C117	NCB21CK-105X	C CAPACITOR	1uF 16V K	
C118	NCB31HK-103X	C CAPACITOR	0.01uF 50V K	
C121	NCB31CK-104X	C CAPACITOR	0.1uF 16V K	
C122	NCB31CK-104X	C CAPACITOR	0.1uF 16V K	
C126	NCB31CK-104X	C CAPACITOR	0.1uF 16V K	
C127	NCB31CK-104X	C CAPACITOR	0.1uF 16V K	
C128	NCB31CK-104X	C CAPACITOR	0.1uF 16V K	
C129	NCB31CK-104X	C CAPACITOR	0.1uF 16V K	
C130	NCB31CK-104X	C CAPACITOR	0.1uF 16V K	
C131	NCB31CK-104X	C CAPACITOR	0.1uF 16V K	
C132	NCB31CK-104X	C CAPACITOR	0.1uF 16V K	
C133	NCB31CK-104X	C CAPACITOR	0.1uF 16V K	
C134	NCB31CK-104X	C CAPACITOR	0.1uF 16V K	
C135	NCB31CK-104X	C CAPACITOR	0.1uF 16V K	
C136	NCB31CK-104X	C CAPACITOR	0.1uF 16V K	
C137	NBE20JM-226X	TA E CAPACITOR	22uF 6.3V M	
C139	NBE20JM-226X	TA E CAPACITOR	22uF 6.3V M	
C142	NCB31CK-104X	C CAPACITOR	0.1uF 16V K	
C143	NBE41AM-476X	TA E CAPACITOR	47uF 10V M	
C145	NBE41AM-476X	TA E CAPACITOR	47uF 10V M	
C148	NCB31HK-331X	C CAPACITOR	330pF 50V K	
C149	NCB31CK-104X	C CAPACITOR	0.1uF 16V K	
C151	NCB31CK-473X	C CAPACITOR	0.047uF 16V K	
C155	NDC31HJ-101X	C CAPACITOR	100pF 50V J	
C156	NCB31CK-104X	C CAPACITOR	0.1uF 16V K	
C161	NCB31CK-104X	C CAPACITOR	0.1uF 16V K	
C162	NCB31CK-104X	C CAPACITOR	0.1uF 16V K	
C164	NCB21CK-105X	C CAPACITOR	1uF 16V K	
C165	NCB31CK-104X	C CAPACITOR	0.1uF 16V K	
C167	NDC31HJ-272X	C CAPACITOR	2700pF 50V J	
C170	NCB31CK-104X	C CAPACITOR	0.1uF 16V K	
C173	NCB31CK-104X	C CAPACITOR	0.1uF 16V K	
C174	NCB31CK-104X	C CAPACITOR	0.1uF 16V K	
C175	NBE61CM-107X	TA E CAPACITOR	100uF 16V M	
C176	NCB31CK-104X	C CAPACITOR	0.1uF 16V K	
C177	NCB31CK-104X	C CAPACITOR	0.1uF 16V K	
C178	NCB31CK-104X	C CAPACITOR	0.1uF 16V K	
C197	NCB31CK-104X	C CAPACITOR	0.1uF 16V K	
C199	NCB31CK-104X	C CAPACITOR	0.1uF 16V K	
C200	NBE40JM-476X	TA E CAPACITOR	47uF 6.3V M	
C201	NCB31CK-104X	C CAPACITOR	0.1uF 16V K	
C205	NCB21AK-225X	C CAPACITOR	2.2uF 10V K	
C206	NDC31HJ-222X	C CAPACITOR	2200pF 50V J	
C211	NCB31CK-104X	C CAPACITOR	0.1uF 16V K	
C215	NDC31HJ-181X	C CAPACITOR	180pF 50V J	
C216	NCB31CK-104X	C CAPACITOR	0.1uF 16V K	
C218	NCB31CK-104X	C CAPACITOR	0.1uF 16V K	
C219	NCB31CK-223X	C CAPACITOR	0.022uF 16V K	
C220	NCB31HK-102X	C CAPACITOR	1000pF 50V K	
C222	NCB31CK-104X	C CAPACITOR	0.1uF 16V K	
C223	NCB31HK-102X	C CAPACITOR	1000pF 50V K	
C224	NCB21AK-225X	C CAPACITOR	2.2uF 10V K	
C225	NBE61CM-107X	TA E CAPACITOR	100uF 16V M	
C228	NCB31HK-102X	C CAPACITOR	1000pF 50V K	
C229	NCB31CK-223X	C CAPACITOR	0.022uF 16V K	
C232	NBE61CM-107X	TA E CAPACITOR	100uF 16V M	
C233	NCB21CK-105X	C CAPACITOR	1uF 16V K	
C235	NCB31HK-102X	C CAPACITOR	1000pF 50V K	
C237	NDC31HJ-221X	C CAPACITOR	220pF 50V J	
C238	NCB31CK-104X	C CAPACITOR	0.1uF 16V K	
C240	NCB31CK-104X	C CAPACITOR	0.1uF 16V K	
C241	NCB31CK-104X	C CAPACITOR	0.1uF 16V K	
R21	NRSA63J-0R0X	MG RESISTOR	0Ω 1/10W J	
R22	NRSA63J-0R0X	MG RESISTOR	0Ω 1/10W J	

⚠ Symbol No.	Part No.	Part Name	Description	Local
R25	NRSA63J-0R0X	MG RESISTOR	0Ω 1/10W J	
R31	NRSA63J-0R0X	MG RESISTOR	0Ω 1/10W J	
R36	NRSA6AD-153W	MG RESISTOR	15kΩ 1/16W D	
R37	NRSA6AD-153W	MG RESISTOR	15kΩ 1/16W D	
R46	NRSA6AD-103W	MG RESISTOR	10kΩ 1/16W D	
R47	NRSA6AD-103W	MG RESISTOR	10kΩ 1/16W D	
R49	NRSA63J-0R0X	MG RESISTOR	0Ω 1/10W J	
R51	NRSA63J-0R0X	MG RESISTOR	0Ω 1/10W J	
R52	NRSA6AD-103W	MG RESISTOR	10kΩ 1/16W D	
R53	NRSA6AD-103W	MG RESISTOR	10kΩ 1/16W D	
R54	NRSA6AD-910W	MG RESISTOR	91Ω 1/16W D	
R55	NRSA6AD-910W	MG RESISTOR	91Ω 1/16W D	
R56	NRSA63D-432X	MG RESISTOR	4.3kΩ 1/16W D	
R57	NRSA63D-242X	MG RESISTOR	2.4kΩ 1/16W D	
R58	NRS125J-390X	MG RESISTOR	39Ω 1/2W J	
R59	NRSA63J-2R2X	MG RESISTOR	2.2Ω 1/16W J	
R60	NRSA6AD-102W	MG RESISTOR	1kΩ 1/16W D	
R61	NRSA6AD-471W	MG RESISTOR	470Ω 1/16W D	
R62	NRSA6AD-471W	MG RESISTOR	470Ω 1/16W D	
R64	NRSA63D-432X	MG RESISTOR	4.3kΩ 1/16W D	
R65	NRSA63D-242X	MG RESISTOR	2.4kΩ 1/16W D	
R66	NRS125J-120X	MG RESISTOR	12Ω 1/2W J	
R67	NRSA63J-2R2X	MG RESISTOR	2.2Ω 1/16W J	
R68	NRSA6AD-102W	MG RESISTOR	1kΩ 1/16W D	
R69	NRSA63J-471X	MG RESISTOR	470Ω 1/16W J	
R70	NRSA6AD-331W	MG RESISTOR	330Ω 1/16W D	
R77	NRSA02J-0R0X	MG RESISTOR	0Ω 1/10W J	
R79	NRSA6AD-104W	MG RESISTOR	100kΩ 1/16W D	
R83	NRSA6AD-103W	MG RESISTOR	10kΩ 1/16W D	
R87	NRSA63J-103X	MG RESISTOR	10kΩ 1/16W J	
R89	NRSA63J-103X	MG RESISTOR	10kΩ 1/16W J	
R90	NRSA6AD-103W	MG RESISTOR	10kΩ 1/16W D	
R92	NRSA63J-473X	MG RESISTOR	47kΩ 1/16W J	
R93	NRSA6AD-203W	MG RESISTOR	20kΩ 1/16W D	
R94	NRSA6AD-223W	MG RESISTOR	22kΩ 1/16W D	
R99	NRSA63J-0R0X	MG RESISTOR	0Ω 1/10W J	
R100	NRSA6AD-103W	MG RESISTOR	10kΩ 1/16W D	
R101	NRSA63J-0R0X	MG RESISTOR	0Ω 1/10W J	
R105	NRSA63J-0R0X	MG RESISTOR	0Ω 1/10W J	
R106	NRSA63J-103X	MG RESISTOR	10kΩ 1/16W J	
R107	NRSA63J-152X	MG RESISTOR	1.5kΩ 1/16W J	
R109	NRSA63J-0R0X	MG RESISTOR	0Ω 1/10W J	
R112	NRSA63J-0R0X	MG RESISTOR	0Ω 1/10W J	
R113	NRSA63J-0R0X	MG RESISTOR	0Ω 1/10W J	
R114	NRSA63J-103X	MG RESISTOR	10kΩ 1/16W J	
R117	NRSA6AD-103W	MG RESISTOR	10kΩ 1/16W D	
R118	NRSA6AD-101W	MG RESISTOR	100Ω 1/16W D	
R119	NRSA63D-471X	MG RESISTOR	470Ω 1/16W D	
R120	NRSA63J-152X	MG RESISTOR	1.5kΩ 1/16W J	
R125	NRSA63J-120X	MG RESISTOR	12Ω 1/16W J	
R126	NRSA63J-102X	MG RESISTOR	1kΩ 1/16W J	
R128	NRSA6AD-270W	MG RESISTOR	27Ω 1/16W D	
R129	NRSA6AD-103W	MG RESISTOR	10kΩ 1/16W D	
R131	NRSA6AD-102W	MG RESISTOR	1kΩ 1/16W D	
R132	NRSA6AD-102W	MG RESISTOR	1kΩ 1/16W D	
R133	NRSA6AD-223W	MG RESISTOR	22kΩ 1/16W D	
R134	NRSA6AD-104W	MG RESISTOR	100kΩ 1/16W D	
R136	NRSA63J-0R0X	MG RESISTOR	0Ω 1/10W J	
R137	NRSA63J-0R0X	MG RESISTOR	0Ω 1/10W J	
R138	NRSA63J-0R0X	MG RESISTOR	0Ω 1/10W J	
R141	NRSA63D-332X	MG RESISTOR	3.3kΩ 1/16W D	
R142	NRSA63J-0R0X	MG RESISTOR	0Ω 1/10W J	
R143	NRSA6AD-101W	MG RESISTOR	100Ω 1/16W D	
R144	NRSA6AD-103W	MG RESISTOR	10kΩ 1/16W D	
R145	NRSA6AD-103W	MG RESISTOR	10kΩ 1/16W D	
R152	NRSA63J-0R0X	MG RESISTOR	0Ω 1/10W J	
R153	NRSA63D-162X	MG RESISTOR	1.6kΩ 1/16W D	
R155	NRSA63J-0R0X	MG RESISTOR	0Ω 1/10W J	
R156	NRSA63J-0R0X	MG RESISTOR	0Ω 1/10W J	
R160	NRSA63D-303X	MG RESISTOR	30kΩ 1/16W D	
R163	NRSA6AD-103W	MG RESISTOR	10kΩ 1/16W D	
R164	NRSA63J-181X	MG RESISTOR	180Ω 1/16W J	
R165	NRSA6AD-473W	MG RESISTOR	47kΩ 1/16W D	
R166	NRSA6AD-473W	MG RESISTOR	47kΩ 1/16W D	
R168	NRSA6AD-473W	MG RESISTOR	47kΩ 1/16W D	
R170	NRSA6AD-471W	MG RESISTOR	470Ω 1/16W D	
R171	NRSA63J-105X	MG RESISTOR	1MΩ 1/16W J	
R172	NRSA6AD-101W	MG RESISTOR	100Ω 1/16W D	

⚠ Symbol No.	Part No.	Part Name	Description	Local
R173	NRSA6AD-101W	MG RESISTOR	100Ω 1/16W D	
R174	NRSA6AD-101W	MG RESISTOR	100Ω 1/16W D	
R177	NRSA63J-0R0X	MG RESISTOR	0Ω 1/10W J	
R178	NRSA63J-0R0X	MG RESISTOR	0Ω 1/10W J	
R181	NQR0129-002X	FERRITE BEADS		
R183	NRSA63J-0R0X	MG RESISTOR	0Ω 1/10W J	
R184	NRSA63J-0R0X	MG RESISTOR	0Ω 1/10W J	
R187	NRSA63J-0R0X	MG RESISTOR	0Ω 1/10W J	
R189	NRSA6AD-331W	MG RESISTOR	330Ω 1/16W D	
R190	NRSA6AD-331W	MG RESISTOR	330Ω 1/16W D	
R195	NRSA6AD-102W	MG RESISTOR	1kΩ 1/16W D	
R211	NRSA6AD-473W	MG RESISTOR	47kΩ 1/16W D	
R213	NRSA63J-100X	MG RESISTOR	10Ω 1/16W J	
R214	NRSA63J-0R0X	MG RESISTOR	0Ω 1/10W J	
R215	NRSA63D-122X	MG RESISTOR	1.2kΩ 1/16W D	
R216	NRSA63D-122X	MG RESISTOR	1.2kΩ 1/16W D	
R217	NRSA6AD-100W	MG RESISTOR	10Ω 1/16W D	
R218	NRSA63J-0R0X	MG RESISTOR	0Ω 1/10W J	
R220	NRSA63J-0R0X	MG RESISTOR	0Ω 1/10W J	
R226	NRSA6AD-473W	MG RESISTOR	47kΩ 1/16W D	
R227	NRSA63J-222X	MG RESISTOR	2.2kΩ 1/16W J	
R228	NRSA63J-103X	MG RESISTOR	10kΩ 1/16W J	
R229	NRSA63J-0R0X	MG RESISTOR	0Ω 1/10W J	
R233	NRSA6AD-103W	MG RESISTOR	10kΩ 1/16W D	
R264	NRSA63J-0R0X	MG RESISTOR	0Ω 1/10W J	
R265	NRSA6AD-103W	MG RESISTOR	10kΩ 1/16W D	
R267	NRSA63D-472X	MG RESISTOR	4.7kΩ 1/16W D	
R268	NRSA63J-0R0X	MG RESISTOR	0Ω 1/10W J	
R305	NRS181F-330X	MG RESISTOR	33Ω 1/8W F	
R306	NRS181F-330X	MG RESISTOR	33Ω 1/8W F	
R309	NRS125J-R47X	MG RESISTOR	0.47Ω 1/2W J	
R310	NRSA6AD-333W	MG RESISTOR	33kΩ 1/16W D	
R311	NRSA63J-391X	MG RESISTOR	390Ω 1/16W J	
R318	NRSA63J-203X	MG RESISTOR	20kΩ 1/16W J	
R319	NRSA6AD-622W	MG RESISTOR	6.2kΩ 1/16W D	
R323	NRSA6AD-391W	MG RESISTOR	390Ω 1/16W D	
R324	NRSA63D-682X	MG RESISTOR	6.8kΩ 1/16W D	
R325	NRSA63D-753X	MG RESISTOR	75kΩ 1/16W D	
R329	NRS125J-R47X	MG RESISTOR	0.47Ω 1/2W J	
R352	NRSA6AD-102W	MG RESISTOR	1kΩ 1/16W D	
R357	NRS125J-R22X	MG RESISTOR	0.22Ω 1/2W J	
R358	NRSA63J-0R0X	MG RESISTOR	0Ω 1/10W J	
R359	NRSA6AD-243W	MG RESISTOR	24kΩ 1/16W D	
R362	NRSA63J-103X	MG RESISTOR	10kΩ 1/16W J	
R364	NRSA63J-391X	MG RESISTOR	390Ω 1/16W J	
R365	NRSA6AD-103W	MG RESISTOR	10kΩ 1/16W D	
R366	NRS125J-R22X	MG RESISTOR	0.22Ω 1/2W J	
R367	NRSA6AD-104W	MG RESISTOR	100kΩ 1/16W D	
R369	NRS125J-R22X	MG RESISTOR	0.22Ω 1/2W J	
R371	NRSA63J-0R0X	MG RESISTOR	0Ω 1/10W J	
R375	NRSA6AD-152W	MG RESISTOR	1.5kΩ 1/16W D	
R376	NRSA6AD-822W	MG RESISTOR	8.2kΩ 1/16W D	
R379	NRSA63D-332X	MG RESISTOR	3.3kΩ 1/16W D	
R380	NRSA63J-223X	MG RESISTOR	22kΩ 1/16W J	
R382	NRSA6AD-102W	MG RESISTOR	1kΩ 1/16W D	
R383	NRSA63J-223X	MG RESISTOR	22kΩ 1/16W J	
R384	NRSA6AD-104W	MG RESISTOR	100kΩ 1/16W D	
R386	NRSA6AD-184W	MG RESISTOR	180kΩ 1/16W D	
R387	NRSA63D-473X	MG RESISTOR	47kΩ 1/16W D	
R391	NRSA6AD-822W	MG RESISTOR	8.2kΩ 1/16W D	
R392	NRSA63J-103X	MG RESISTOR	10kΩ 1/16W J	
R393	NRSA6AD-103W	MG RESISTOR	10kΩ 1/16W D	
R394	NRSA63J-273X	MG RESISTOR	27kΩ 1/16W J	
R397	NRSA6AD-101W	MG RESISTOR	100Ω 1/16W D	
R400	NRSA6AD-153W	MG RESISTOR	15kΩ 1/16W D	
R402	NRSA6AD-473W	MG RESISTOR	47kΩ 1/16W D	
R403	NRSA63J-101X	MG RESISTOR	100Ω 1/16W J	
R406	NRS125J-R22X	MG RESISTOR	0.22Ω 1/2W J	
R417	NRSA63J-183X	MG RESISTOR	18kΩ 1/16W J	
R419	NRSA63D-104X	MG RESISTOR	100kΩ 1/16W D	
R420	NRSA6AD-184W	MG RESISTOR	180kΩ 1/16W D	
L302	NQLA3GK-100X	COIL	10uH K	
L303	NQLA3GK-100X	COIL	10uH K	
CN1	QGF0523F3-20W	CONNECTOR	FFC/FPC (1-20)	
CN2	QGA1002F1-03X	CONNECTOR	W-B (1-3)	
CN101	QGF0522F2-26W	CONNECTOR	FFC/FPC (1-26)	

⚠ Symbol No.	Part No.	Part Name	Description	Local
CN403	QGF0534F3-50X	CONNECTOR	FFC/FPC (1-50)	
K101	NQR0007-002X	FERRITE BEADS		
K102	NQR0007-002X	FERRITE BEADS		
K103	NQR0502-001X	FERRITE BEADS		
K104	NQR0502-001X	FERRITE BEADS		
K105	NRSA63J-0R0X	MG RESISTOR	0Ω 1/10W J	
K106	NRSA63J-0R0X	MG RESISTOR	0Ω 1/10W J	
K107	NRSA63J-0R0X	MG RESISTOR	0Ω 1/10W J	
K108	NQR0129-002X	FERRITE BEADS		
K110	NQR0129-002X	FERRITE BEADS		
K111	NQR0129-002X	FERRITE BEADS		
K113	NQR0502-001X	FERRITE BEADS		
K114	NQR0022-005X	FERRITE BEADS		
K115	NQR0022-005X	FERRITE BEADS		
K117	NQR0022-005X	FERRITE BEADS		
K118	NRSA63J-0R0X	MG RESISTOR	0Ω 1/10W J	
K119	NRSA63J-0R0X	MG RESISTOR	0Ω 1/10W J	
K120	NRSA63J-0R0X	MG RESISTOR	0Ω 1/10W J	
K121	NQL093K-1R8X	COIL	1.8uH K	
K131	NQR0022-005X	FERRITE BEADS		
K132	NQR0022-005X	FERRITE BEADS		
K133	NQR0022-005X	FERRITE BEADS		
K134	NRSA63J-0R0X	MG RESISTOR	0Ω 1/10W J	
K135	NQR0022-005X	FERRITE BEADS		
K136	NQR0022-005X	FERRITE BEADS		
K137	NRSA63J-0R0X	MG RESISTOR	0Ω 1/10W J	
K141	NRSA63J-0R0X	MG RESISTOR	0Ω 1/10W J	
K142	NRSA63J-0R0X	MG RESISTOR	0Ω 1/10W J	
S1	NSW0313-001X	DETECT SWITCH		
TH491	NAD0025-103X	N THERMISTOR	10kΩ	
X351	NAX0741-001X	CRYSTAL	27.000MHz	
X354	NAX0927-001X	CRYSTAL		

Front end board (Only 624,625,626ver.)

Block No. [0][4]

⚠ Symbol No.	Part No.	Part Name	Description	Local
IC1	BD8215EFV-X	IC		
IC3	MM3233CF-X	IC		
IC301	MN2DS0018MA	IC		
IC302	MM1701CH-X	IC		
IC398	VDG1367-D011AWS	IC(PROGRAMED)		
IC399	M12L128168A-7TG	IC(DIGITAL)		
IC399 or	HY57V281620FTH	IC(DIGITAL)		
IC400	AK4387ET-X	IC		
IC481	BR24S32FVT-W-X	IC(DIGITAL)		
IC501	TC74LCX373FT-X	IC(DIGITAL)		
IC502	TC74LCX373FT-X	IC(DIGITAL)		
Q2	RT1N141U-X	RANSISTOR		
Q4	2SC3928A/R/-X	TRANSISTOR		
Q4 or	2SD601A/R/-X	TRANSISTOR		
Q7	2SC3928A/R/-X	TRANSISTOR		
Q7 or	2SD601A/R/-X	TRANSISTOR		
Q8	2SA1774/R/-X	TRANSISTOR		
Q9	2SC4617/R/-X	TRANSISTOR		
Q101	2SB1424/R/-W	TRANSISTOR		
Q102	2SC4617/R/-X	TRANSISTOR		
Q103	2SB1424/R/-W	TRANSISTOR		
Q104	2SC4617/R/-X	TRANSISTOR		
Q105	2SC4617/R/-X	TRANSISTOR		
Q106	2SK3546J-X	MOS FET		
Q107	2SK3546J-X	MOS FET		
Q301	RT1N441U-X	DIGI TRANSISTOR		
Q302	RT1N441U-X	DIGI TRANSISTOR		
D6	AN1102W-6-X	IR LED		
D7	AN1102W-6-X	IR LED		
D9	PS1192HB-22-X	PHOTO TRANSISTOR		
D11	PS1192HB-22-X	PHOTO TRANSISTOR		
C2	NCB31CK-104X	C CAPACITOR	0.1uF 16V K	
C3	NCB31CK-104X	C CAPACITOR	0.1uF 16V K	

⚠ Symbol No.	Part No.	Part Name	Description	Local
C4	NCB31CK-104X	C CAPACITOR	0.1uF 16V K	
C5	NCB31CK-104X	C CAPACITOR	0.1uF 16V K	
C6	NCB31CK-104X	C CAPACITOR	0.1uF 16V K	
C7	NCB31CK-104X	C CAPACITOR	0.1uF 16V K	
C8	NCB31CK-104X	C CAPACITOR	0.1uF 16V K	
C9	NCB31CK-104X	C CAPACITOR	0.1uF 16V K	
C11	NCB31CK-104X	C CAPACITOR	0.1uF 16V K	
C12	NCB31CK-104X	C CAPACITOR	0.1uF 16V K	
C13	NCB31CK-104X	C CAPACITOR	0.1uF 16V K	
C14	NCB31CK-104X	C CAPACITOR	0.1uF 16V K	
C15	NCB31CK-104X	C CAPACITOR	0.1uF 16V K	
C16	NCB31CK-104X	C CAPACITOR	0.1uF 16V K	
C17	NCB31CK-104X	C CAPACITOR	0.1uF 16V K	
C18	NCB31CK-104X	C CAPACITOR	0.1uF 16V K	
C19	NCB31CK-104X	C CAPACITOR	0.1uF 16V K	
C20	NCB31CK-104X	C CAPACITOR	0.1uF 16V K	
C21	NBE41AM-476X	TA E CAPACITOR	47uF 10V M	
C22	NBE41AM-476X	TA E CAPACITOR	47uF 10V M	
C23	NBE41AM-476X	TA E CAPACITOR	47uF 10V M	
C24	NCB31CK-104X	C CAPACITOR	0.1uF 16V K	
C25	NCB31CK-104X	C CAPACITOR	0.1uF 16V K	
C26	NCB31CK-104X	C CAPACITOR	0.1uF 16V K	
C31	NCB31HK-681X	C CAPACITOR	680pF 50V K	
C32	NCB31HK-561X	C CAPACITOR	560pF 50V K	
C60	NCB31HK-103X	C CAPACITOR	0.01uF 50V K	
C63	NBE40JM-476X	TA E CAPACITOR	47uF 6.3V M	
C65	NCB31CK-104X	C CAPACITOR	0.1uF 16V K	
C66	NCB31CK-104X	C CAPACITOR	0.1uF 16V K	
C67	NCB31HK-103X	C CAPACITOR	0.01uF 50V K	
C68	NCB31CK-104X	C CAPACITOR	0.1uF 16V K	
C69	NCB21CK-105X	C CAPACITOR	1uF 16V K	
C70	NCB31CK-104X	C CAPACITOR	0.1uF 16V K	
C71	NCB31CK-104X	C CAPACITOR	0.1uF 16V K	
C72	NCB31CK-105X	C CAPACITOR	1uF 16V K	
C73	NCB31CK-104X	C CAPACITOR	0.1uF 16V K	
C74	NCB31CK-104X	C CAPACITOR	0.1uF 16V K	
C75	NCB31CK-104X	C CAPACITOR	0.1uF 16V K	
C76	NCB31CK-104X	C CAPACITOR	0.1uF 16V K	
C77	NCB31CK-104X	C CAPACITOR	0.1uF 16V K	
C78	NCB31CK-104X	C CAPACITOR	0.1uF 16V K	
C79	NCB31CK-104X	C CAPACITOR	0.1uF 16V K	
C80	NCB21CK-105X	C CAPACITOR	1uF 16V K	
C81	NDC31HJ-120X	C CAPACITOR	12pF 50V J	
C82	NDC31HJ-150X	C CAPACITOR	15pF 50V J	
C83	NCB31CK-104X	C CAPACITOR	0.1uF 16V K	
C84	NCB31CK-333X	C CAPACITOR	0.033uF 16V K	
C85	NCB31CK-104X	C CAPACITOR	0.1uF 16V K	
C86	NCB31CK-104X	C CAPACITOR	0.1uF 16V K	
C87	NCB31CK-104X	C CAPACITOR	0.1uF 16V K	
C88	NCB31CK-104X	C CAPACITOR	0.1uF 16V K	
C89	NCB31HK-183X	C CAPACITOR	0.018uF 50V K	
C90	NCB31HK-562X	C CAPACITOR	5600pF 50V K	
C91	NCB31CK-104X	C CAPACITOR	0.1uF 16V K	
C92	NCB21CK-105X	C CAPACITOR	1uF 16V K	
C93	NCB21CK-105X	C CAPACITOR	1uF 16V K	
C99	NCB31CK-104X	C CAPACITOR	0.1uF 16V K	
C100	NCB31CK-684X	C CAPACITOR	0.68uF 16V K	
C101	NCB31CK-104X	C CAPACITOR	0.1uF 16V K	
C102	NCB31CK-684X	C CAPACITOR	0.68uF 16V K	
C106	NCB31CK-104X	C CAPACITOR	0.1uF 16V K	
C109	NCB21CK-105X	C CAPACITOR	1uF 16V K	
C113	NCB21CK-105X	C CAPACITOR	1uF 16V K	
C117	NCB21CK-105X	C CAPACITOR	1uF 16V K	
C118	NCB31HK-103X	C CAPACITOR	0.01uF 50V K	
C121	NCB31CK-104X	C CAPACITOR	0.1uF 16V K	
C122	NCB31CK-104X	C CAPACITOR	0.1uF 16V K	
C126	NCB31CK-104X	C CAPACITOR	0.1uF 16V K	
C127	NCB31CK-104X	C CAPACITOR	0.1uF 16V K	
C128	NCB31CK-104X	C CAPACITOR	0.1uF 16V K	
C129	NCB31CK-104X	C CAPACITOR	0.1uF 16V K	
C130	NCB31CK-104X	C CAPACITOR	0.1uF 16V K	
C131	NCB31CK-104X	C CAPACITOR	0.1uF 16V K	
C132	NCB31CK-104X	C CAPACITOR	0.1uF 16V K	
C133	NCB31CK-104X	C CAPACITOR	0.1uF 16V K	
C134	NCB31CK-104X	C CAPACITOR	0.1uF 16V K	
C135	NCB31CK-104X	C CAPACITOR	0.1uF 16V K	
C136	NCB31CK-104X	C CAPACITOR	0.1uF 16V K	
C137	NBE20JM-226X	TA E CAPACITOR	22uF 6.3V M	

⚠ Symbol No.	Part No.	Part Name	Description	Local
C139	NBE20JM-226X	TA E CAPACITOR	22uF 6.3V M	
C142	NCB31CK-104X	C CAPACITOR	0.1uF 16V K	
C143	NBE41AM-476X	TA E CAPACITOR	47uF 10V M	
C145	NBE41AM-476X	TA E CAPACITOR	47uF 10V M	
C148	NCB31HK-331X	C CAPACITOR	330pF 50V K	
C149	NCB31CK-104X	C CAPACITOR	0.1uF 16V K	
C151	NCB31CK-473X	C CAPACITOR	0.047uF 16V K	
C155	NDC31HJ-101X	C CAPACITOR	100pF 50V J	
C156	NCB31CK-104X	C CAPACITOR	0.1uF 16V K	
C161	NCB31CK-104X	C CAPACITOR	0.1uF 16V K	
C162	NCB31CK-104X	C CAPACITOR	0.1uF 16V K	
C164	NCB21CK-105X	C CAPACITOR	1uF 16V K	
C167	NDC31HJ-272X	C CAPACITOR	2700pF 50V J	
C170	NCB31CK-104X	C CAPACITOR	0.1uF 16V K	
C173	NCB31CK-104X	C CAPACITOR	0.1uF 16V K	
C174	NCB31CK-104X	C CAPACITOR	0.1uF 16V K	
C175	NBE61CM-107X	TA E CAPACITOR	100uF 16V M	
C176	NCB31CK-104X	C CAPACITOR	0.1uF 16V K	
C177	NCB31CK-104X	C CAPACITOR	0.1uF 16V K	
C178	NCB31CK-104X	C CAPACITOR	0.1uF 16V K	
C197	NCB31CK-104X	C CAPACITOR	0.1uF 16V K	
C199	NCB31CK-104X	C CAPACITOR	0.1uF 16V K	
C200	NBE40JM-476X	TA E CAPACITOR	47uF 6.3V M	
C201	NCB31CK-104X	C CAPACITOR	0.1uF 16V K	
C205	NCB21AK-225X	C CAPACITOR	2.2uF 10V K	
C206	NDC31HJ-222X	C CAPACITOR	2200pF 50V J	
C211	NCB31CK-104X	C CAPACITOR	0.1uF 16V K	
C215	NDC31HJ-181X	C CAPACITOR	180pF 50V J	
C216	NCB31CK-104X	C CAPACITOR	0.1uF 16V K	
C218	NCB31CK-104X	C CAPACITOR	0.1uF 16V K	
C219	NCB31CK-223X	C CAPACITOR	0.022uF 16V K	
C220	NCB31HK-102X	C CAPACITOR	1000pF 50V K	
C222	NCB31CK-104X	C CAPACITOR	0.1uF 16V K	
C223	NCB31HK-102X	C CAPACITOR	1000pF 50V K	
C224	NCB21AK-225X	C CAPACITOR	2.2uF 10V K	
C225	NBE61CM-107X	TA E CAPACITOR	100uF 16V M	
C228	NCB31HK-102X	C CAPACITOR	1000pF 50V K	
C229	NCB31CK-223X	C CAPACITOR	0.022uF 16V K	
C232	NBE61CM-107X	TA E CAPACITOR	100uF 16V M	
C233	NCB21CK-105X	C CAPACITOR	1uF 16V K	
C235	NCB31HK-102X	C CAPACITOR	1000pF 50V K	
C237	NDC31HJ-221X	C CAPACITOR	220pF 50V J	
C238	NCB31CK-104X	C CAPACITOR	0.1uF 16V K	
C240	NCB31CK-104X	C CAPACITOR	0.1uF 16V K	
C241	NCB31CK-104X	C CAPACITOR	0.1uF 16V K	
R21	NRSA63J-0R0X	MG RESISTOR	0Ω 1/16W J	
R22	NRSA63J-0R0X	MG RESISTOR	0Ω 1/16W J	
R25	NRSA63J-0R0X	MG RESISTOR	0Ω 1/16W J	
R31	NRSA63J-0R0X	MG RESISTOR	0Ω 1/16W J	
R46	NRSA6AD-103W	MG RESISTOR	10kΩ 1/16W D	
R47	NRSA6AD-103W	MG RESISTOR	10kΩ 1/16W D	
R49	NRSA63J-0R0X	MG RESISTOR	0Ω 1/16W J	
R52	NRSA6AD-103W	MG RESISTOR	10kΩ 1/16W D	
R54	NRSA6AD-910W	MG RESISTOR	91Ω 1/16W D	
R55	NRSA6AD-910W	MG RESISTOR	91Ω 1/16W D	
R56	NRSA63D-432X	MG RESISTOR	4.3kΩ 1/16W D	
R57	NRSA63D-242X	MG RESISTOR	2.4kΩ 1/16W D	
R58	NRS125J-390X	MG RESISTOR	39Ω 1/2W J	
R59	NRSA63J-2R2X	MG RESISTOR	2.2Ω 1/16W J	
R60	NRSA6AD-102W	MG RESISTOR	1kΩ 1/16W D	
R61	NRSA6AD-471W	MG RESISTOR	470Ω 1/16W D	
R62	NRSA6AD-471W	MG RESISTOR	470Ω 1/16W D	
R64	NRSA63D-432X	MG RESISTOR	4.3kΩ 1/16W D	
R65	NRSA63D-242X	MG RESISTOR	2.4kΩ 1/16W D	
R66	NRS125J-120X	MG RESISTOR	12Ω 1/2W J	
R67	NRSA63J-2R2X	MG RESISTOR	2.2Ω 1/16W J	
R68	NRSA6AD-102W	MG RESISTOR	1kΩ 1/16W D	
R69	NRSA63J-471X	MG RESISTOR	470Ω 1/16W J	
R70	NRSA6AD-331W	MG RESISTOR	330Ω 1/16W D	
R77	NRSA02J-0R0X	MG RESISTOR	0Ω 1/10W J	
R79	NRSA6AD-104W	MG RESISTOR	100kΩ 1/16W D	
R92	NRSA63J-473X	MG RESISTOR	47kΩ 1/16W J	
R93	NRSA63J-203X	MG RESISTOR	20kΩ 1/16W J	
R94	NRSA63J-223X	MG RESISTOR	22kΩ 1/16W J	
R99	NRSA63J-0R0X	MG RESISTOR	0Ω 1/16W J	
R100	NRSA6AD-103W	MG RESISTOR	10kΩ 1/16W D	
R101	NRSA63J-0R0X	MG RESISTOR	0Ω 1/16W J	

⚠ Symbol No.	Part No.	Part Name	Description	Local
R104	NRSA63J-0R0X	MG RESISTOR	0Ω 1/16W J	
R107	NRSA63J-152X	MG RESISTOR	1.5kΩ 1/16W J	
R109	NRSA63J-0R0X	MG RESISTOR	0Ω 1/16W J	
R112	NRSA63J-223X	MG RESISTOR	22kΩ 1/16W J	
R117	NRSA6AD-103W	MG RESISTOR	10kΩ 1/16W D	
R120	NRSA63J-152X	MG RESISTOR	1.5kΩ 1/16W J	
R125	NRSA63J-120X	MG RESISTOR	12Ω 1/16W J	
R126	NRSA63J-102X	MG RESISTOR	1kΩ 1/16W J	
R128	NRSA6AD-270W	MG RESISTOR	27Ω 1/16W D	
R129	NRSA6AD-103W	MG RESISTOR	10kΩ 1/16W D	
R131	NRSA6AD-102W	MG RESISTOR	1kΩ 1/16W D	
R132	NRSA6AD-102W	MG RESISTOR	1kΩ 1/16W D	
R133	NRSA6AD-223W	MG RESISTOR	22kΩ 1/16W D	
R134	NRSA6AD-104W	MG RESISTOR	100kΩ 1/16W D	
R137	NRSA63J-0R0X	MG RESISTOR	0Ω 1/16W J	
R139	NRSA63J-0R0X	MG RESISTOR	0Ω 1/16W J	
R141	NRSA63D-332X	MG RESISTOR	3.3kΩ 1/16W D	
R142	NRSA63J-0R0X	MG RESISTOR	0Ω 1/16W J	
R143	NRSA6AD-101W	MG RESISTOR	100Ω 1/16W D	
R144	NRSA6AD-103W	MG RESISTOR	10kΩ 1/16W D	
R145	NRSA6AD-103W	MG RESISTOR	10kΩ 1/16W D	
R152	NRSA63J-0R0X	MG RESISTOR	0Ω 1/16W J	
R153	NRSA63D-162X	MG RESISTOR	1.6kΩ 1/16W D	
R155	NRSA63J-0R0X	MG RESISTOR	0Ω 1/16W J	
R156	NRSA63J-0R0X	MG RESISTOR	0Ω 1/16W J	
R160	NRSA63D-303X	MG RESISTOR	30kΩ 1/16W D	
R163	NRSA6AD-103W	MG RESISTOR	10kΩ 1/16W D	
R164	NRSA63J-181X	MG RESISTOR	180Ω 1/16W J	
R165	NRSA6AD-473W	MG RESISTOR	47kΩ 1/16W D	
R166	NRSA6AD-473W	MG RESISTOR	47kΩ 1/16W D	
R167	NRSA6AD-473W	MG RESISTOR	47kΩ 1/16W D	
R168	NRSA6AD-473W	MG RESISTOR	47kΩ 1/16W D	
R170	NRSA6AD-471W	MG RESISTOR	470Ω 1/16W D	
R171	NRSA63J-105X	MG RESISTOR	1MΩ 1/16W J	
R172	NRSA6AD-101W	MG RESISTOR	100Ω 1/16W D	
R173	NRSA6AD-101W	MG RESISTOR	100Ω 1/16W D	
R174	NRSA6AD-101W	MG RESISTOR	100Ω 1/16W D	
R177	NRSA63J-0R0X	MG RESISTOR	0Ω 1/16W J	
R178	NRSA63J-0R0X	MG RESISTOR	0Ω 1/16W J	
R181	NQR0129-002X	FERRITE BEADS		
R183	NRSA63J-0R0X	MG RESISTOR	0Ω 1/16W J	
R184	NRSA63J-0R0X	MG RESISTOR	0Ω 1/16W J	
R189	NRSA6AD-331W	MG RESISTOR	330Ω 1/16W D	
R190	NRSA6AD-331W	MG RESISTOR	330Ω 1/16W D	
R195	NRSA6AD-102W	MG RESISTOR	1kΩ 1/16W D	
R211	NRSA6AD-473W	MG RESISTOR	47kΩ 1/16W D	
R213	NRSA63J-100X	MG RESISTOR	10Ω 1/16W J	
R214	NRSA63J-0R0X	MG RESISTOR	0Ω 1/16W J	
R215	NRSA63D-122X	MG RESISTOR	1.2kΩ 1/16W D	
R216	NRSA63D-122X	MG RESISTOR	1.2kΩ 1/16W D	
R217	NRSA6AD-100W	MG RESISTOR	10Ω 1/16W D	
R218	NRSA63J-0R0X	MG RESISTOR	0Ω 1/16W J	
R220	NRSA63J-0R0X	MG RESISTOR	0Ω 1/16W J	
R226	NRSA6AD-473W	MG RESISTOR	47kΩ 1/16W D	
R227	NRSA63J-222X	MG RESISTOR	2.2kΩ 1/16W J	
R228	NRSA63J-103X	MG RESISTOR	10kΩ 1/16W J	
R229	NRSA63J-0R0X	MG RESISTOR	0Ω 1/16W J	
R233	NRSA6AD-103W	MG RESISTOR	10kΩ 1/16W D	
R264	NRSA63J-0R0X	MG RESISTOR	0Ω 1/16W J	
R265	NRSA6AD-103W	MG RESISTOR	10kΩ 1/16W D	
R267	NRSA63D-472X	MG RESISTOR	4.7kΩ 1/16W D	
R268	NRSA63J-0R0X	MG RESISTOR	0Ω 1/16W J	
R309	NRS125J-R47X	MG RESISTOR	0.47Ω 1/2W J	
R310	NRSA6AD-333W	MG RESISTOR	33kΩ 1/16W D	
R311	NRSA63J-391X	MG RESISTOR	390Ω 1/16W J	
R318	NRSA63J-203X	MG RESISTOR	20kΩ 1/16W J	
R319	NRSA6AD-622W	MG RESISTOR	6.2kΩ 1/16W D	
R323	NRSA6AD-391W	MG RESISTOR	390Ω 1/16W D	
R324	NRSA63D-682X	MG RESISTOR	6.8kΩ 1/16W D	
R325	NRSA63D-753X	MG RESISTOR	75kΩ 1/16W D	
R329	NRS125J-R47X	MG RESISTOR	0.47Ω 1/2W J	
R330	NRSA63J-0R0X	MG RESISTOR	0Ω 1/16W J	
R352	NRSA6AD-102W	MG RESISTOR	1kΩ 1/16W D	
R357	NRS125J-R22X	MG RESISTOR	0.22Ω 1/2W J	
R358	NRSA63J-0R0X	MG RESISTOR	0Ω 1/16W J	
R359	NRSA6AD-243W	MG RESISTOR	24kΩ 1/16W D	
R362	NRSA63J-103X	MG RESISTOR	10kΩ 1/16W J	
R364	NRSA63J-391X	MG RESISTOR	390Ω 1/16W J	

⚠ Symbol No.	Part No.	Part Name	Description	Local
R365	NRSA6AD-103W	MG RESISTOR	10kΩ 1/16W D	
R366	NRS125J-R22X	MG RESISTOR	0.22Ω 1/2W J	
R367	NRSA6AD-104W	MG RESISTOR	100kΩ 1/16W D	
R369	NRS125J-R22X	MG RESISTOR	0.22Ω 1/2W J	
R371	NRSA63J-0R0X	MG RESISTOR	0Ω 1/16W J	
R375	NRSA6AD-152W	MG RESISTOR	1.5kΩ 1/16W D	
R376	NRSA6AD-822W	MG RESISTOR	8.2kΩ 1/16W D	
R379	NRSA63D-332X	MG RESISTOR	3.3kΩ 1/16W D	
R380	NRSA63J-223X	MG RESISTOR	22kΩ 1/16W J	
R382	NRSA6AD-102W	MG RESISTOR	1kΩ 1/16W D	
R383	NRSA63J-223X	MG RESISTOR	22kΩ 1/16W J	
R384	NRSA6AD-104W	MG RESISTOR	100kΩ 1/16W D	
R386	NRSA6AD-184W	MG RESISTOR	180kΩ 1/16W D	
R387	NRSA63D-473X	MG RESISTOR	47kΩ 1/16W D	
R391	NRSA6AD-822W	MG RESISTOR	8.2kΩ 1/16W D	
R392	NRSA63J-103X	MG RESISTOR	10kΩ 1/16W J	
R393	NRSA6AD-103W	MG RESISTOR	10kΩ 1/16W D	
R394	NRSA63J-273X	MG RESISTOR	27kΩ 1/16W J	
R397	NRSA6AD-101W	MG RESISTOR	100Ω 1/16W D	
R400	NRSA6AD-153W	MG RESISTOR	15kΩ 1/16W D	
R402	NRSA6AD-473W	MG RESISTOR	47kΩ 1/16W D	
R403	NRSA63J-101X	MG RESISTOR	100Ω 1/16W J	
R406	NRS125J-R22X	MG RESISTOR	0.22Ω 1/2W J	
R417	NRSA63J-183X	MG RESISTOR	18kΩ 1/16W J	
R419	NRSA63D-104X	MG RESISTOR	100kΩ 1/16W D	
R420	NRSA6AD-184W	MG RESISTOR	180kΩ 1/16W D	
L302	NQLA3GK-100X	COIL	10uH K	
L303	NQLA3GK-100X	COIL	10uH K	
CN1	QGF0523F3-20W	CONNECTOR	FFC/FPC (1-20)	
CN2	QGA1002F1-03X	CONNECTOR	W-B (1-3)	
CN101	QGF0522F2-26W	CONNECTOR	FFC/FPC (1-26)	
CN403	QGF0534F3-50X	CONNECTOR	FFC/FPC (1-50)	
K101	NQR0007-002X	FERRITE BEADS		
K102	NQR0007-002X	FERRITE BEADS		
K103	NQR0502-001X	FERRITE BEADS		
K108	NQR0129-002X	FERRITE BEADS		
K113	NQR0502-001X	FERRITE BEADS		
K114	NRSA63J-0R0X	MG RESISTOR	0Ω 1/16W J	
K115	NRSA63J-0R0X	MG RESISTOR	0Ω 1/16W J	
K117	NRSA63J-0R0X	MG RESISTOR	0Ω 1/16W J	
K118	NRSA63J-0R0X	MG RESISTOR	0Ω 1/16W J	
K119	NRSA63J-0R0X	MG RESISTOR	0Ω 1/16W J	
K120	NRSA63J-0R0X	MG RESISTOR	0Ω 1/16W J	
K121	NQL093K-1R8X	COIL	1.8uH K	
K131	NQR0022-005X	FERRITE BEADS		
K132	NQR0022-005X	FERRITE BEADS		
K133	NQR0022-005X	FERRITE BEADS		
K135	NQR0022-005X	FERRITE BEADS		
K136	NQR0022-005X	FERRITE BEADS		
K137	NRSA63J-0R0X	MG RESISTOR	0Ω 1/16W J	
K141	NRSA63J-0R0X	MG RESISTOR	0Ω 1/16W J	
K142	NRSA63J-0R0X	MG RESISTOR	0Ω 1/16W J	
S1	NSW0313-001X	DETECT SWITCH		
TH491	NAD0025-103X	N THERMISTOR	10kΩ	
X351	NAX0741-001X	CRYSTAL	27.000MHz	

<MEMO>

Packing materials and accessories parts list

Block No. M 3 M M

No additional / supplemental order of WARRANTY CARDs are available

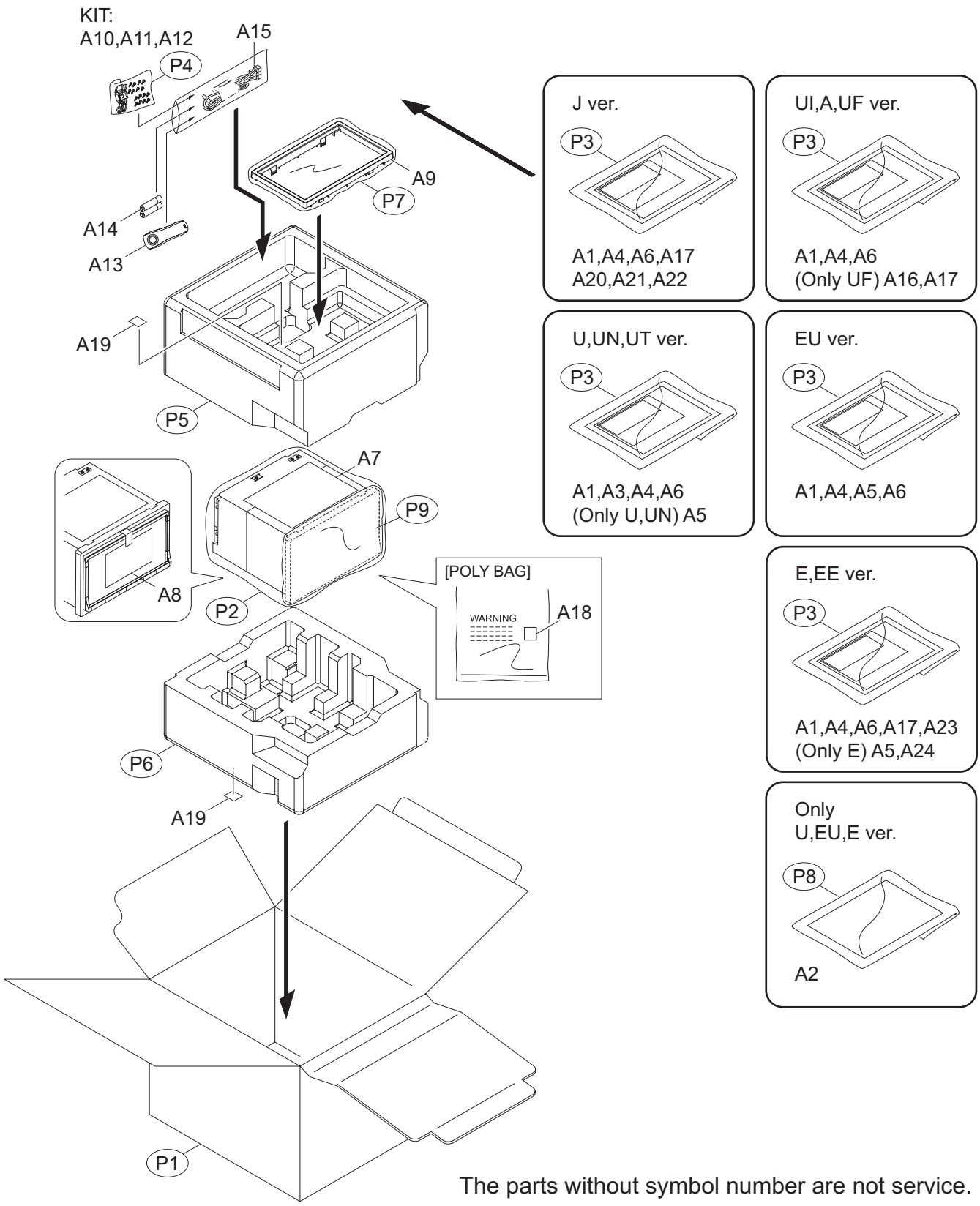

The parts without symbol number are not service.

Packing and Accessories

Block No. [M][3][M][M]

⚠	Symbol No.	Part No.	Part Name	Description	Local
	A 1	GET0602-001A	INST BOOK	ENG FRE SPA	792J,720J
	A 1	GET0605-001B	INST BOOK	ENG	624UI,625U,625UT,626U,626UT,626A,724UI,725U,725UN,725UT,726U,726UN,726UT,726A
	A 1	GET0605-005A	INST BOOK	ENG FRE RUS	625EU,626EU,725EU,726EU
	A 1	GET0603-001A	INST BOOK	ENG GER FRE DUT	720E
	A 1	GET0604-001A	INST BOOK	ENG RUS UKR	720EE
	A 1	GET0614-001A	INST BOOK	CHI(PEKIN)	728UF
	A 2	GET0605-002A	INST BOOK	ARA KOR PER THA	625U,626U,725U,726U
	A 2	GET0605-006A	INST BOOK	SPA PER TUR	625EU,626EU,725EU,726EU
	A 2	GET0603-002A	INST BOOK	SPA ITA SWE POR	720E
	A 3	GET0605-003B	INST BOOK	CHI(TAIWAN)	625U,625UT,626U,626UT,725U,725UT,726U,726UT
	A 3	GET0605-004A	INST BOOK	ENG INA	725UN,726UN
	A 4	GET0602-002A	INSTALL MANUAL	ENG FRE SPA	792J,720J
	A 4	GET0605-010B	INSTALL MANUAL	ENG	624UI,626A,724UI,726A
	A 4	GET0605-007B	INSTALL MANUAL	ENG CHI(TAIWAN)	625U,625UT,626U,626UT,725U,725UT,726U,726UT
	A 4	GET0605-012A	INSTALL MANUAL	SPA PER TUR	625EU,626EU,725EU,726EU
	A 4	GET0603-003A	INSTALL MANUAL	ENG GER FRE DUT	720E
	A 4	GET0604-002A	INSTALL MANUAL	ENG RUS UKR	720EE
	A 4	GET0605-009B	INSTALL MANUAL	ENG INA	725UN,726UN
	A 4	GET0614-002A	INSTALL MANUAL	CHI(PEKIN)	728UF
	A 5	GET0605-008B	INSTALL MANUAL	ARA KOR PER THA	625U,626U,725U,726U
	A 5	GET0605-011A	INSTALL MANUAL	ENG FRE RUS	625EU,626EU,725EU,726EU
	A 5	GET0603-004A	INSTALL MANUAL	SPA ITA SWE POR	720E
	A 6	LVT1672-002A	INST SHEET		
	A 7	GE40469-002A	CAUTION SHEET		792J,625EU,626EU,720J,720E,720EE,725EU,726EU
	A 7	GE40469-001A	CAUTION SHEET		624UI,625U,625UT,626U,626UT,626A,724UI,725U,725UN,725UT,726U,726UN,726UT,726A,728UF
	A 8	GE40473-001A	CAUTION SHEET		
	A 9	LV22463-004A	TRIM PLATE		792J,720J,720E,720EE,726EU
	A 9	LV22464-001A	TRIM PLATE		624UI,625U,625UT,626U,626UT,626A,724UI,725U,725UN,725UT,726U,726UN,726UT,726A,728UF
	A 9	LV22463-003A	TRIM PLATE		625EU,725EU
	A 9	LV22463-002A	TRIM PLATE		626EU
	A 10	QYSDSP5008ZA	SCREW	M5 x 8mm(x8)	
	A 11	QYSSSP5008ZA	SCREW	M5 x 8mm(x8)	
	A 12	LV41478-001A	CORD CONNECTER		
	A 13	RM-RK252	REMOTE CONTROL UNIT		
	A 14	----------	BATTERY	(x2)	
	A 15	QAM1180-001	POWER CORD		792J,624UI,625U,625UT,626U,626UT,626A,720J,724UI,725U,725UN,725UT,726U,726UN,726UT,726A,728UF
	A 15	QAM1181-001	POWER CORD		625EU,626EU,720E,720EE,725EU,726EU
	A 16	BT-59022-9	SVC CENTER LIST		728UF
	A 17	----------	WARRANTY CARD	BT-52008-1	792J,720J
	A 17	----------	WARRANTY CARD	BT-54038-1	720E,720EE
	A 17	----------	WARRANTY CARD	BT-59033-1	728UF
	A 18	LV44928-301A	RECYCLE MARK		728UF
	A 19	LV44927-001A	RECYCLE MARK	(x2)	728UF
	A 20	BT-51044-1	REGIS. CARD		792J,720J
	A 21	LVT1920-001A	CAUTION SHEET		792J,720J
	A 22	----------	WARRANTY CARD	BT-51029-3	792J
	A 22	----------	WARRANTY CARD	BT-51018-6	720J
	A 23	VND3046-001	SERIAL TICKET		720E,720EE
	A 24	VND3050-002	IDENTITY CARD		720E
	P 1	GE33618-002A	INNER CARTON		792J
	P 1	GE33647-002A	INNER CARTON		624UI,626U,626UT,626EU,626A
	P 1	GE33642-002A	INNER CARTON		625U,625UT,625EU
	P 1	GE33621-003A	INNER CARTON		720J
	P 1	GE33625-002A	INNER CARTON		720E,720EE,724UI,726U,726UN,726UT,726EU,726A,728UF
	P 1	GE33631-002A	INNER CARTON		725U,725UN,725UT,725EU
	P 2	QPC03504015PB	POLY BAG	35cm x 40cm	
	P 3	FSPG4002-001	POLY BAG		
	P 4	QPA00801205	POLY BAG	8cm x 12cm	
	P 5	LV11528-003A	CUSHION TOP(E)		792J,625EU,626EU,720J,720E,720EE,725EU,726EU
	P 5	LV11526-003A	CUSHION TOP		624UI,625U,625UT,626U,626UT,626A,724UI,725U,725UN,725UT,726U,726UN,726UT,726A,728UF
	P 6	LV11529-002A	CUSHION BOTTOM		792J,625EU,626EU,720J,720E,720EE,725EU,726EU
	P 6	LV11527-002A	CUSHION BOTTOM		624UI,625U,625UT,626U,626UT,626A,724UI,725U,725UN,725UT,726U,726UN,726UT,726A,728UF
	P 7	QPC01603015	POLY BAG	16cm x 30cm	792J,720J,720E,720EE,726EU
	P 7	FSPG4002-001	POLY BAG		624UI,625U,625UT,625EU,626U,626UT,626EU,626A,724UI,725U,725UN,725UT,725EU,726U,726UN,726UT,726A,728UF
	P 8	FSPG4002-001	POLY BAG		625U,625EU,626U,626EU,720E,725U,725EU,726U,726EU
	P 9	GE40467-003A	NON WOVEN SHEET		

JVC

SCHEMATIC DIAGRAMS

DVD RECEIVER WITH MONITOR

KW-ADV792J, KW-AVX624UI, KW-AVX625U, KW-AVX625UT, KW-AVX625EU, KW-AVX626U, KW-AVX626UT, KW-AVX626EU, KW-AVX626A, KW-AVX720J, KW-AVX720E, KW-AVX720EE, KW-AVX724UI, KW-AVX725U, KW-AVX725UN, KW-AVX725UT, KW-AVX725EU, KW-AVX726U, KW-AVX726UN, KW-AVX726UT, KW-AVX726EU, KW-AVX726A, KW-AVX728UF

DVD-ROM No.SML2009Q1

only KW-ADV792/KW-AVX720J

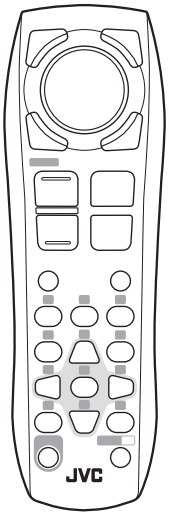

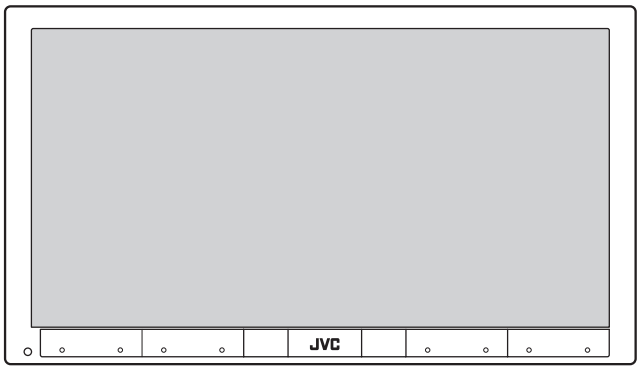

only KW-AVX726/KW-AVX725 E,EE except KW-AVX626/KW-AVX625/KW-AVX624

Lead free solder used in the board (material : Sn-Ag-Cu, melting point : 219 Centigrade)

Lead free solder used in the board (material : Sn-Cu, melting point : 230 Centigrade)

Contents

Block diagram ---------- 2-1

Standard schematic diagrams ---------- 2-2

Printed circuit boards ---------- 2-7 to 10

COPYRIGHT ⓒ2009 Victor Company of Japan, Limited.

No.MA443SCH<Rev.001>

2009/4

In regard with component parts appearing on the silk-screen printed side (parts side) of the PWB diagrams, the parts that are printed over with black such as the resistor (▬), diode (▮) and ICP (●) or identified by the "⚠" mark nearby are critical for safety.

Block diagram

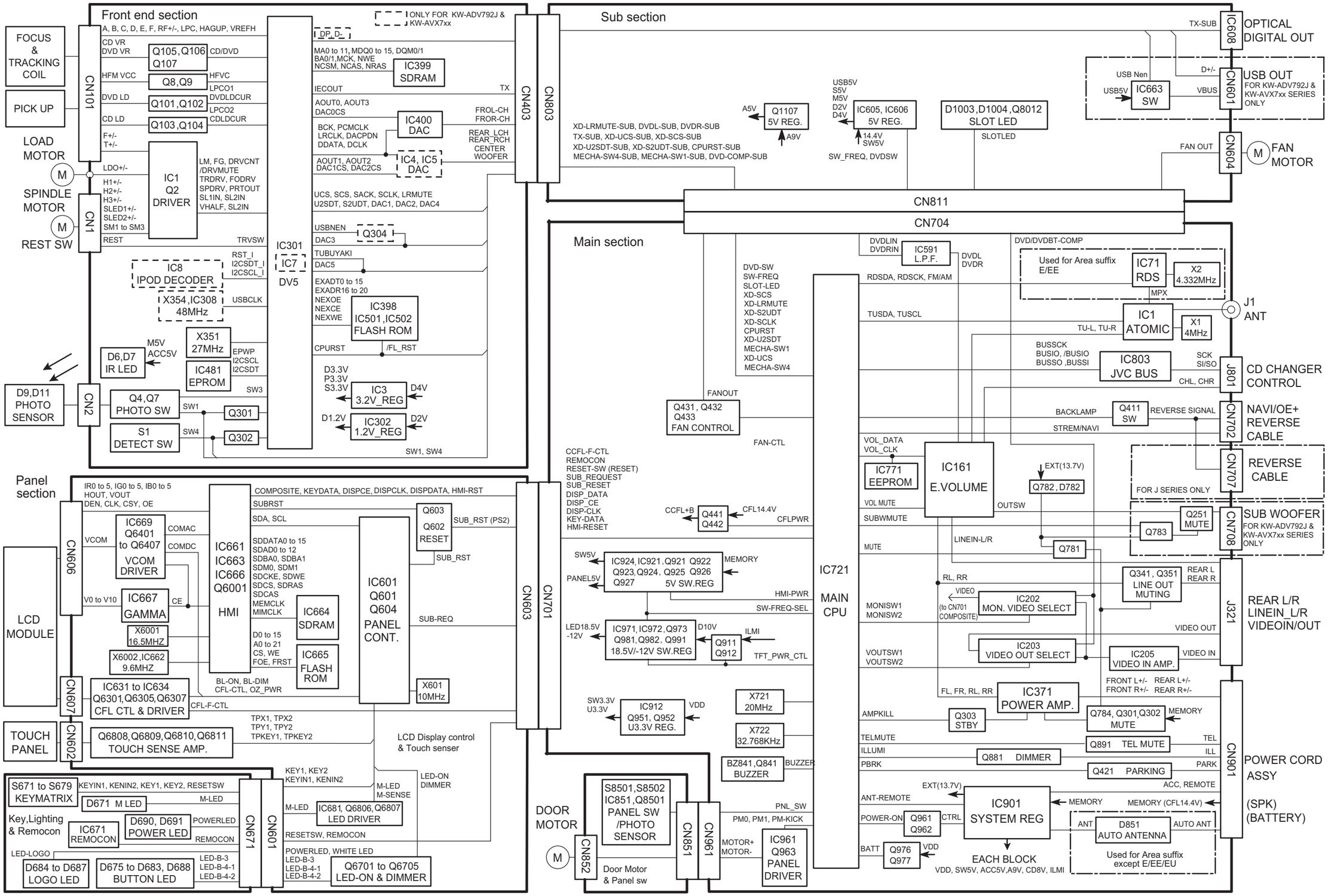

Standard schematic diagrams

■ Main section (Common use)

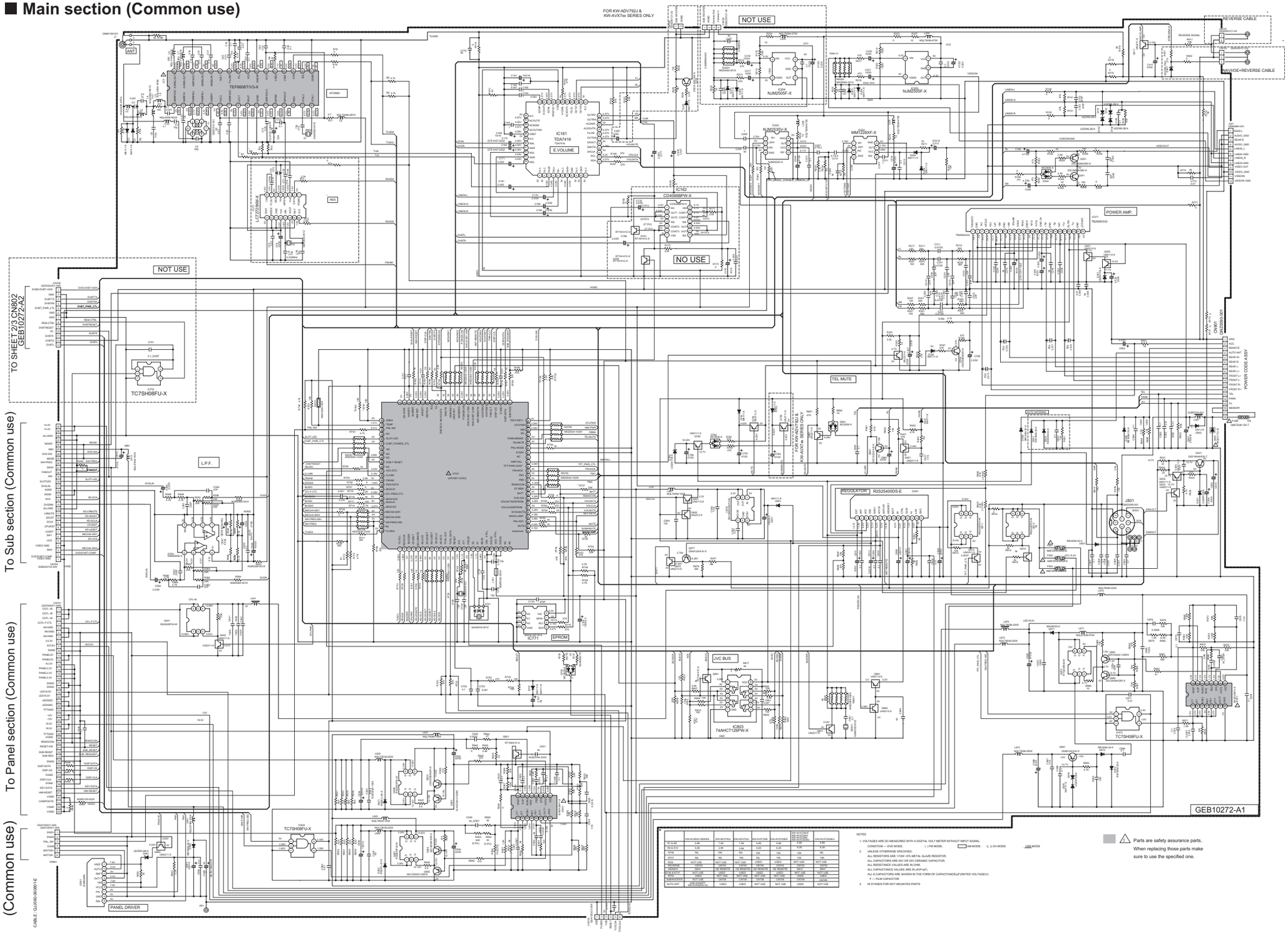

	KW-AVX60X SERIES	KW-ADV792J	KW-ADV792J	KW-AVX720E	KW-AVX720E	KW-AVX720E/J KW-AVX720E/K KW-AVX720E/U KW-AVX720E/EU	KW-AVX720E/EU
R7 & R8	6.8K	7.5K	7.5K	6.8K	6.8K	6.8K	6.8K
R9 & R10	8.2K	2.8K	2.8K	8.2K	8.2K	8.2K	8.2K
R19a	NSL	10K	NSL	10K	10K	10K	NSL
R19d	NSL	NSL	NSL	10K	NSL	10K	10K
R23	NOT USE	NOT USE	NOT USE	USED	USED	NOT USE	NOT USE
REMARK	ON/OFF	ON/OFF	ON/OFF	ON/OFF	ON/OFF	ON/OFF	ON/OFF
DIGNAV	NAVI	DE REMOTE	DE REMOTE	DE REMOTE	DE REMOTE	NAVI	NAVI
PIN 9 (CN1)	NOT USE	USED	USED	USED	USED	NOT USE	USED
PIN 8 (CN1)	USED	NOT USE	NOT USE	NOT USE	NOT USE	USED	USED
AUDIOCONV	NOT USE	ON/OFF	ON/OFF	ON/OFF	ON/OFF	ON/OFF	ON/OFF
AUTO ANT	ON/OFF (UPD78F1167GC-GJ)	USED	USED	NOT USE	NOT USE	USED	NOT USE

NOTES

1. VOLTAGES ARE DC-MEASURED WITH A DIGITAL VOLT METER WITHOUT INPUT SIGNAL
   CONDITION — DVD MODE, ( ) FM MODE, HM MODE, ( ) CH MODE, USB MODE
2. UNLESS OTHERWISE SPECIFIED.
   ALL RESISTORS ARE 1/10W ±5% METAL GLAZE RESISTOR.
   ALL CAPACITORS ARE 50V OR 25V CERAMIC CAPACITOR.
   ALL RESISTANCE VALUES ARE IN OHM.
   ALL CAPACITANCE VALUES ARE IN μF(P=μF)
   ALL E-CAPACITORS ARE SHOWN IN THE FORM OF CAPACITANCE(μF)/RATED VOLTAGE(V)
   F — FILM CAPACITOR.
3. NI STANDS FOR NOT MOUNTED PARTS

⚠ Parts are safety assurance parts. When replacing those parts make sure to use the specified one.

■ Sub section (Common use)

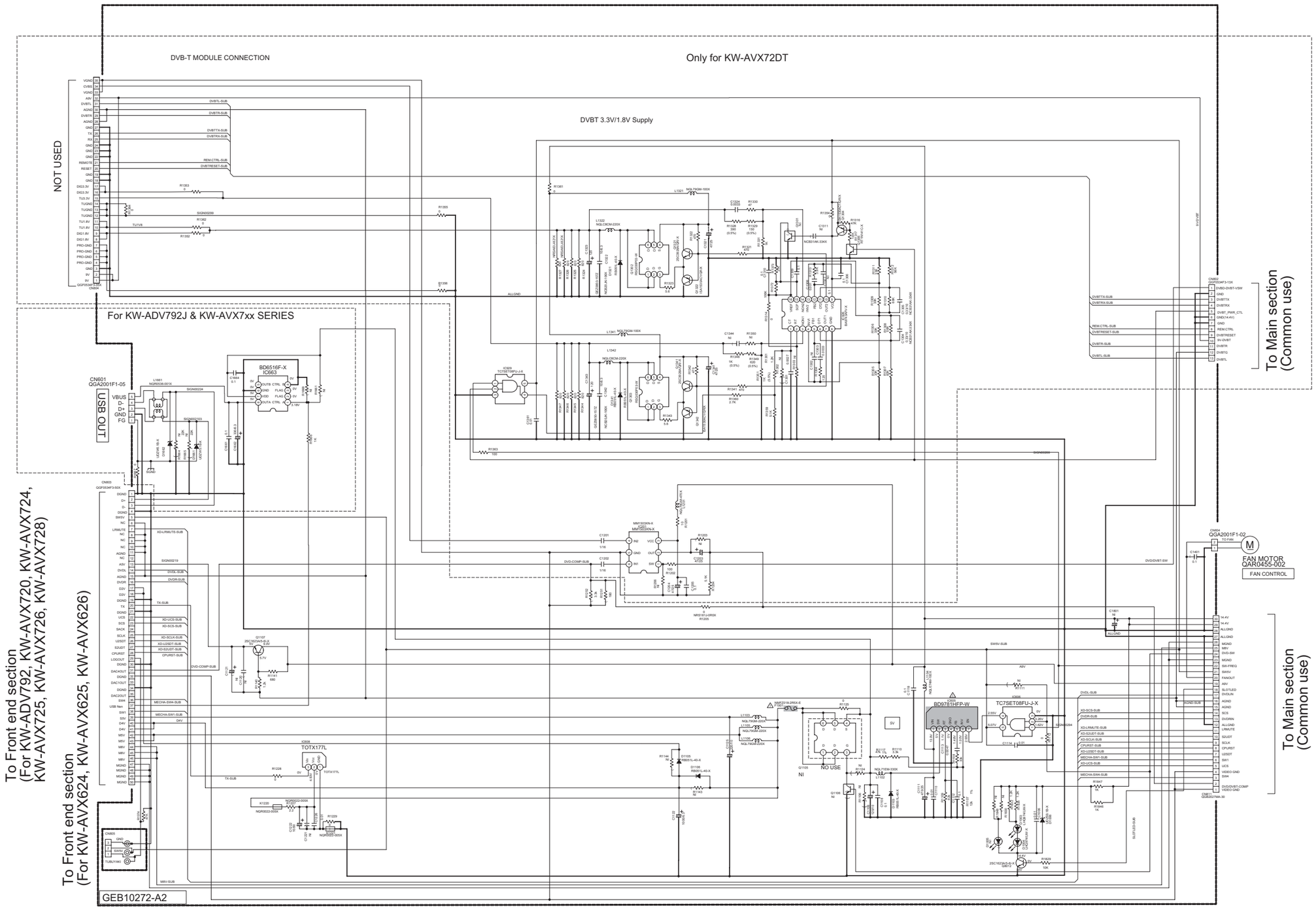

Parts are safety assurance parts.
When replacing those parts make sure to use the specified one.

NOTES

1. VOLTAGES ARE DC-MEASURED WITH A DIGITAL VOLT METER WITHOUT INPUT SIGNAL
   CONDITION — DVD MODE, ( ) FM MODE, ▭ AM MODE, (( )) CH MODE, ___ USB MODE
2. UNLESS OTHERWISE SPECIFIED.
   ALL RESISTORS ARE 1/10W +5% METAL GLAZE RESISTOR.
   ALL CAPACITORS ARE 50V OR 25V CERAMIC CAPACITOR.
   ALL RESISTANCE VALUES ARE IN OHM.
   ALL CAPACITANCE VALUES ARE IN uF(F=pF)
   ALL E.CAPACITORS ARE SHOWN IN THE FORM OF CAPACITANCE(uF)/RATED VOLTAGE(V)
   F — FILM CAPACITOR.
3. NI STANDS FOR NOT MOUNTED PARTS

■ Panel section (Common use)

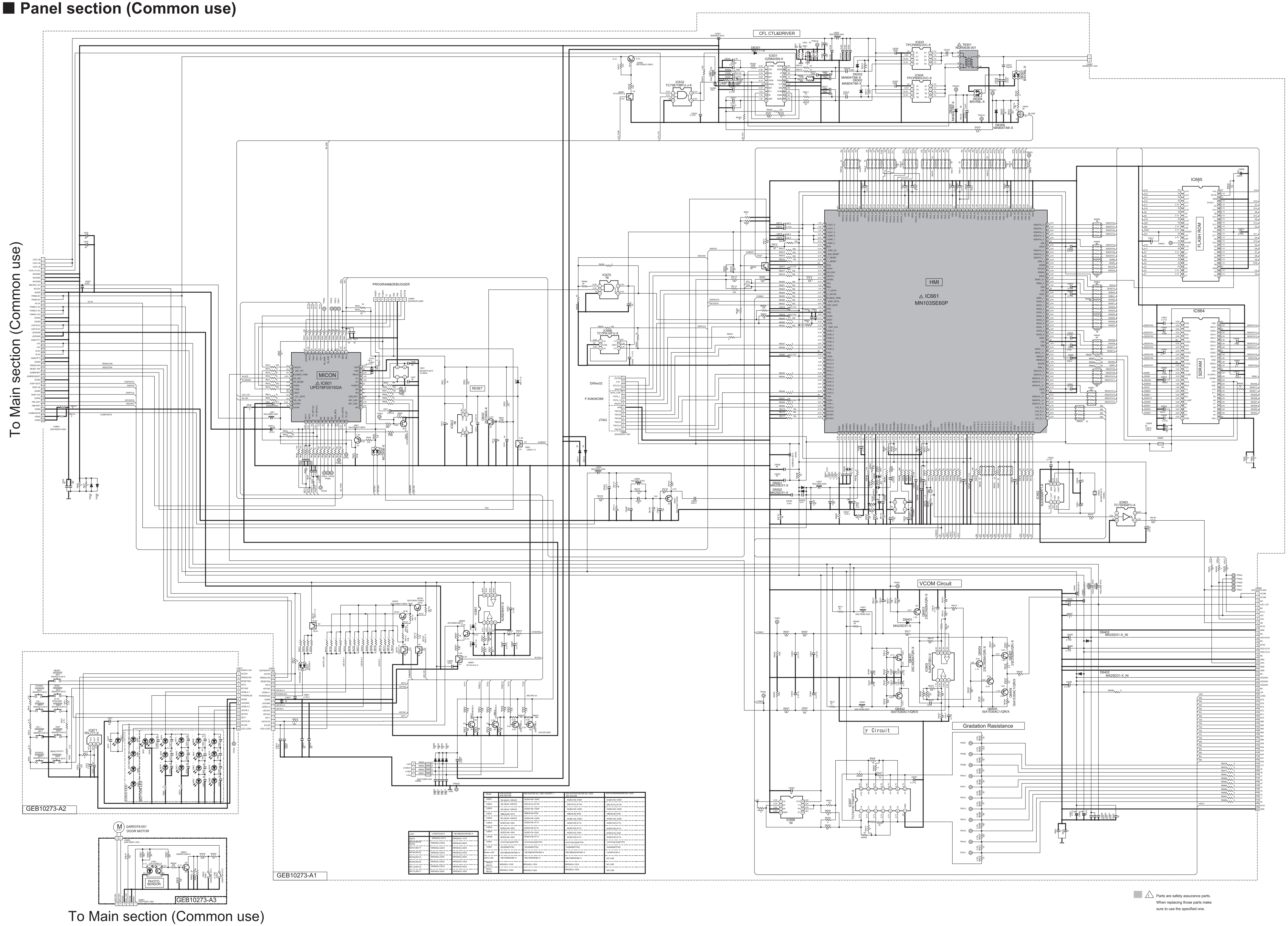

LED	LHQ974/LM/-X	NECBB205/WPQR/-X
R6701	NRSA63J-331X	NRSA63J-101X
R6702,R6703 R6704	NRSA63J-432X	NRSA63J-562X
R6707,R6717	NRSA02J-222X	NRSA02J-222X
R6706,R6724	NRSA02J-222X	NRSA02J-222X
R6709,R6718	NRSA63J-332X	NRSA63J-242X
R6708,R6725	NRSA63J-302X	NRSA63J-182X
R6712,R6719	NRSA63J-332X	NRSA63J-242X
R6710,R6711	NRSA63J-302X	NRSA63J-182X

Model	KW-AVX720 KW-ADV792	KW-AVX720 ALL VER. EXCEPT J	KW-AVX724/725/726 ALL VER. KW-AVX728	KW-AVX624/625/626 ALL VER.
C6001	NCJA0JK-105W-R	NCBA1AK-104W	NCBA1AK-104W	NCBA1AK-104W
C6002	NCJA0JK-105W-R	NDCA1HJ-471W	NDCA1HJ-471W	NDCA1HJ-471W
C6003	NCJA0JK-105W-R	NCBA1AK-104W	NCBA1AK-104W	NCBA1AK-104W
C6027	NBE40JM-107X	NBE40JM-476X	NBE40JM-476X	NBE40JM-476X
C6039	NCJA0JK-105W-R	NCBA1AK-104W	NCBA1AK-104W	NCBA1AK-104W
C6502	NCB31AK-105X	NCB31HK-471X	NCB31HK-471X	NCB31HK-471X
C6504	NCB31AK-105X	NCB31HK-471X	NCB31HK-471X	NCB31HK-471X
C6507	NCB31AK-105X	NCB31CK-104X	NCB31CK-104X	NCB31CK-104X
C6508	NCB31AK-105X	NCB31HK-471X	NCB31HK-471X	NCB31HK-471X
IC664	HY57V641620FTPH	HY57V641620FTPH	HY57V641620FTPH	HY57V641620FTPH
IC665	SG32N90TFI03	SG32N90TFI03	SG64N90TFI03	SG64N90TFI03
Button LED	NECBB205/WPQR/-X	NECBB205/WPQR/-X	NECBB205/WPQR/-X	LHQ974/LM/-X
LOGO LED	NECWB205/B2/-X	NECWB205/B2/-X	NECWB205/B2/-X	NO USE
R6720 R6723	NRSA63J-152X	NRSA63J-152X	NRSA63J-152X	NO USE
R6721 R6722	NRSA63J-182X	NRSA63J-182X	NRSA63J-182X	NO USE

⚠ Parts are safety assurance parts. When replacing those parts make sure to use the specified one.

■ Front end section (For KW-ADV792, KW-AVX720, KW-AVX724, KW-AVX725, KW-AVX726, KW-AVX728)

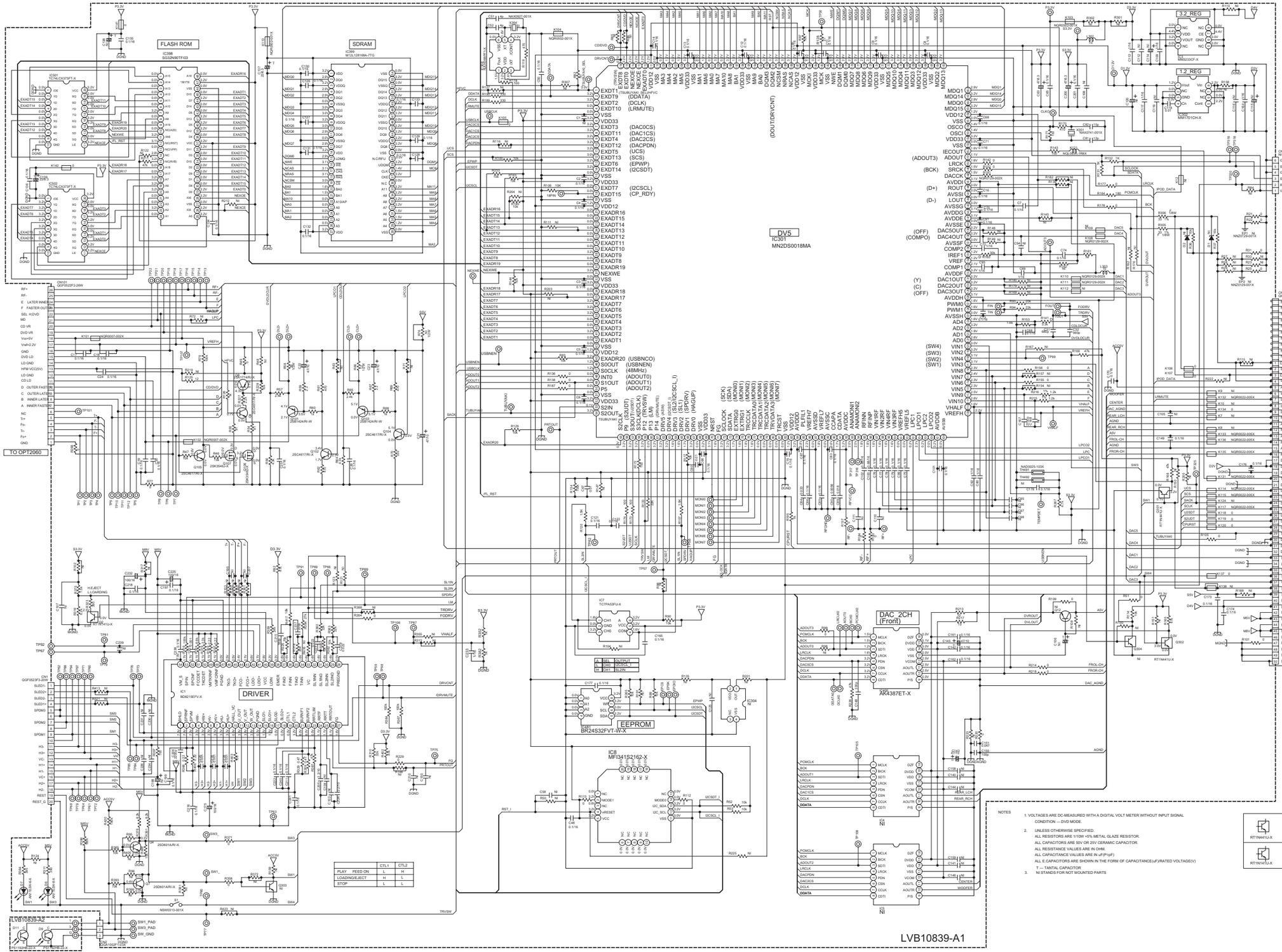

	CTL1	CTL2
PLAY FEED ON	L	H
LOADING/EJECT	H	L
STOP	L	L

NOTES

1. VOLTAGES ARE DC-MEASURED WITH A DIGITAL VOLT METER WITHOUT INPUT SIGNAL CONDITION — DVD MODE.
2. UNLESS OTHERWISE SPECIFIED.
   ALL RESISTORS ARE 1/10W +5% METAL GLAZE RESISTOR.
   ALL CAPACITORS ARE 50V OR 25V CERAMIC CAPACITOR.
   ALL RESISTANCE VALUES ARE IN OHM.
   ALL CAPACITANCE VALUES ARE IN uF(P=pF)
   ALL E.CAPACITORS ARE SHOWN IN THE FORM OF CAPACITANCE(uF)/RATED VOLTAGE(V)
   T — TANTAL CAPACITOR
3. NI STANDS FOR NOT MOUNTED PARTS

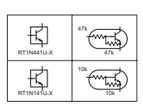

■ Front end section (For KW-AVX624, KW-AVX625, KW-AVX626)

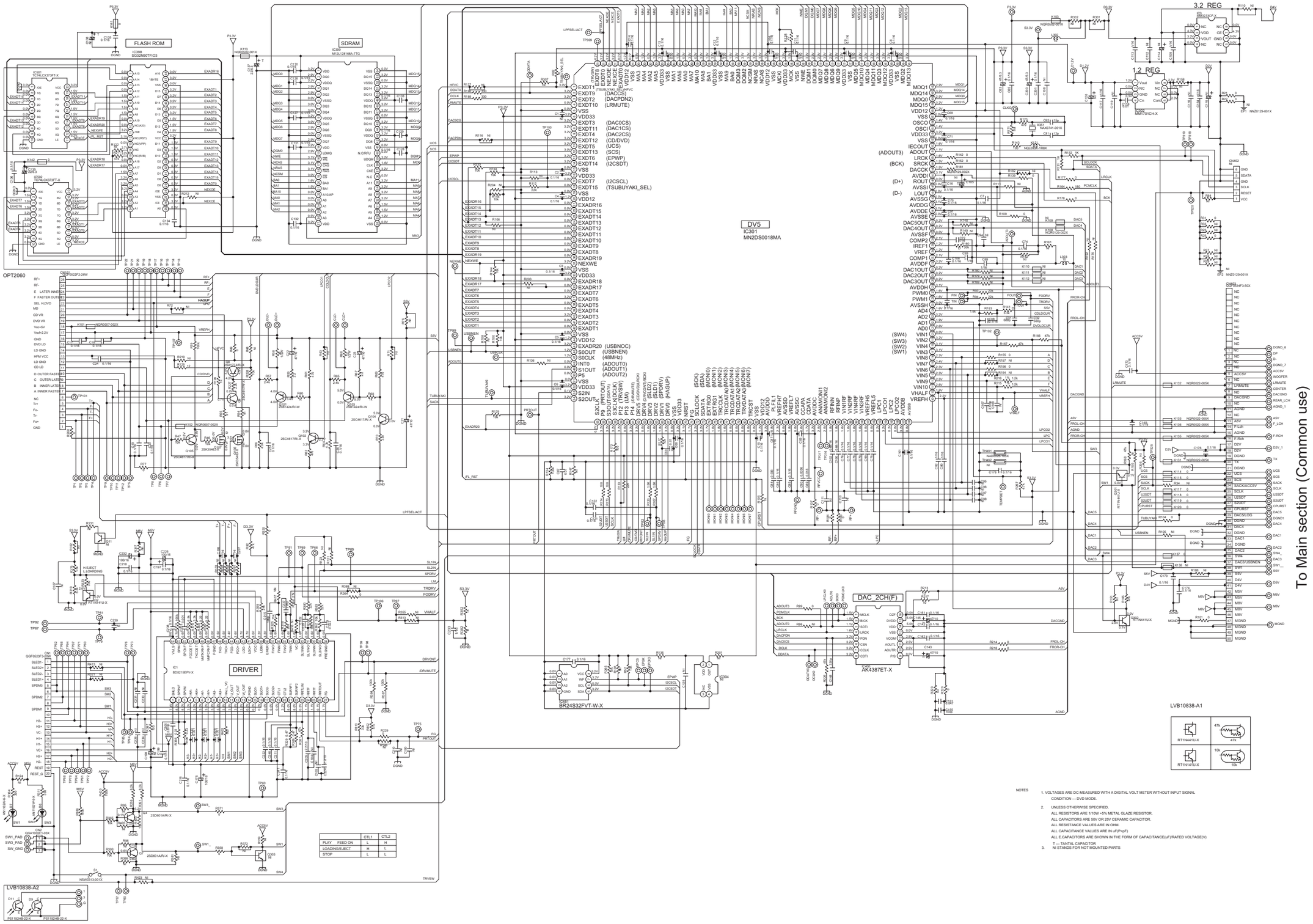

	CTL1	CTL2
PLAY FEED ON	L	H
LOADING/EJECT	H	L
STOP	L	L

NOTES

1. VOLTAGES ARE DC-MEASURED WITH A DIGITAL VOLT METER WITHOUT INPUT SIGNAL CONDITION — DVD MODE.
2. UNLESS OTHERWISE SPECIFIED.
   ALL RESISTORS ARE 1/10W +5% METAL GLAZE RESISTOR.
   ALL CAPACITORS ARE 50V OR 25V CERAMIC CAPACITOR.
   ALL RESISTANCE VALUES ARE IN OHM.
   ALL CAPACITANCE VALUES ARE IN uF(P)=pF)
   ALL E.CAPACITORS ARE SHOWN IN THE FORM OF CAPACITANCE(uF)/RATED VOLTAGE(V)
   T — TANTAL CAPACITOR.
3. NI STANDS FOR NOT MOUNTED PARTS

Printed circuit boards

■ Main board (Common use)

(Lead free solder used in the board (material : Sn-Ag-Cu, melting point : 219 Centigrade))
(Lead free solder used in the board (material : Sn-Cu, melting point : 230 Centigrade))

forward side

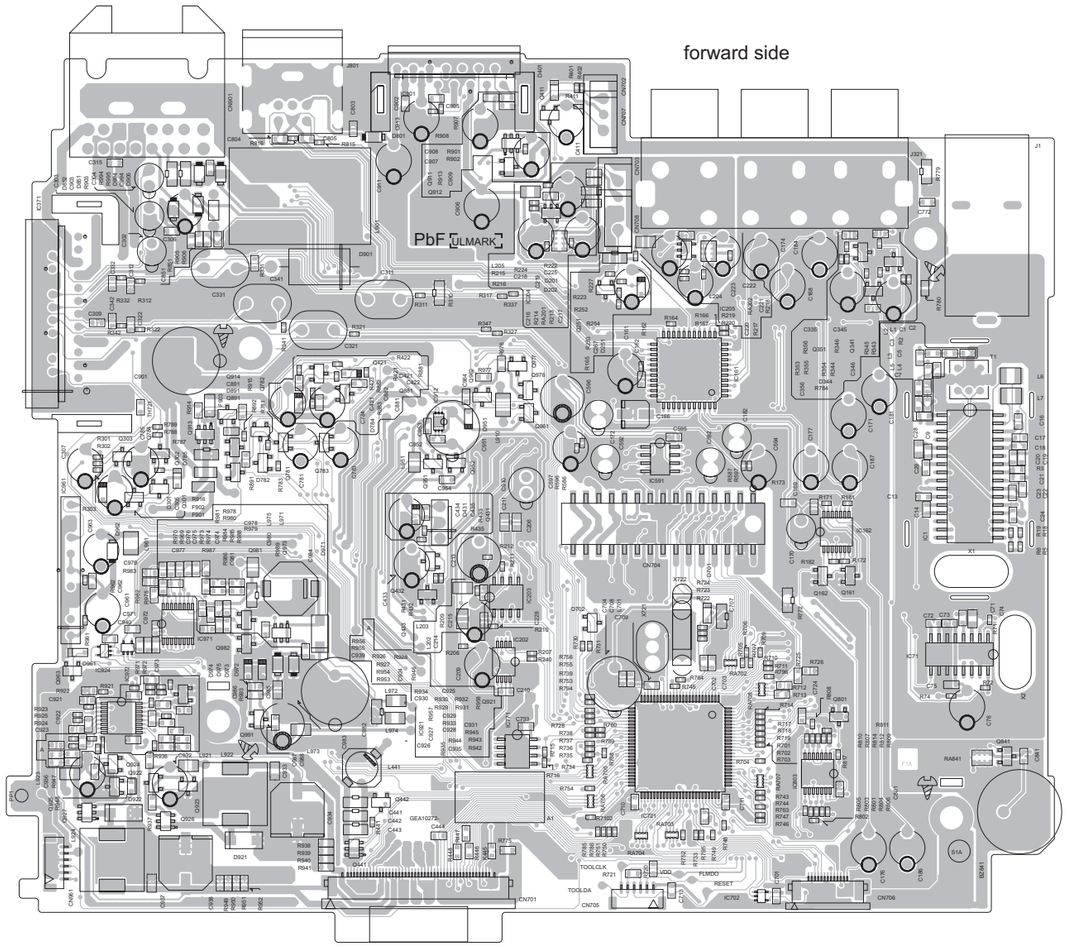

reverse side

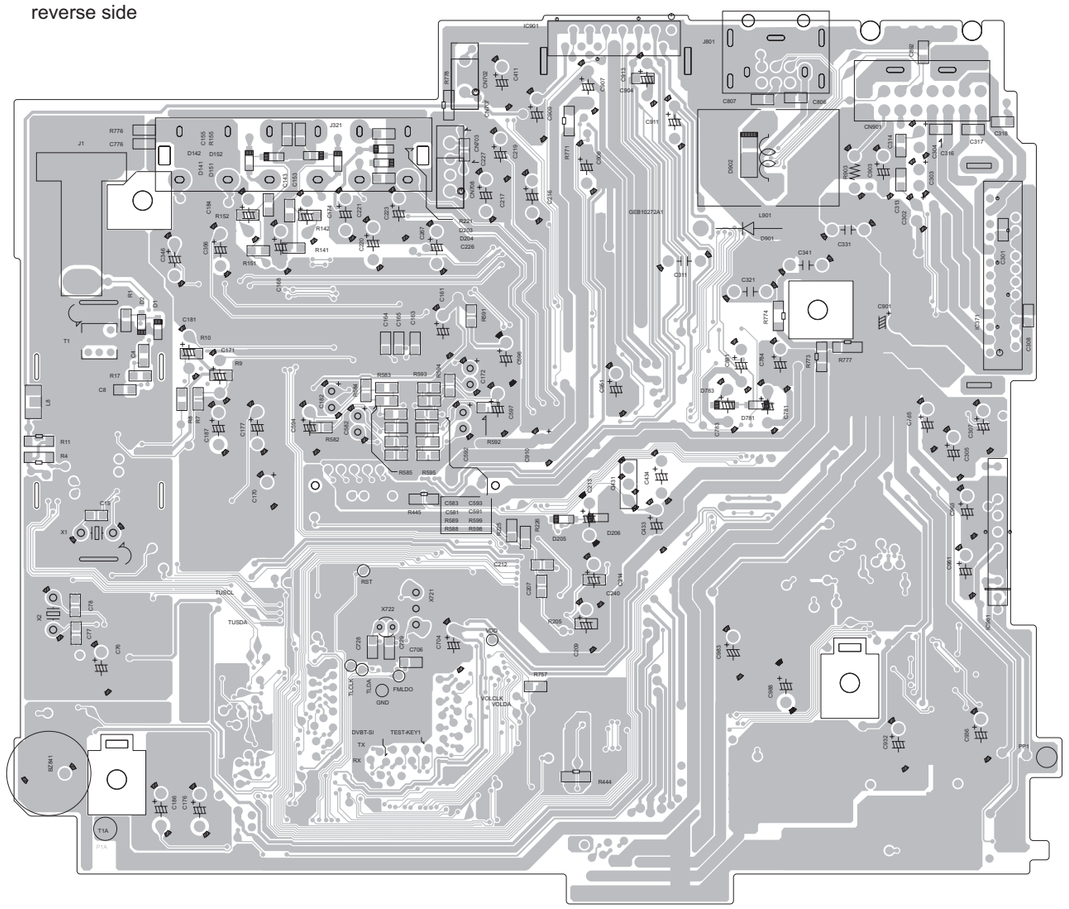

■ KEY board (Common use)

(Lead free solder used in the board (material : Sn-Ag-Cu, melting point : 219 Centigrade))
(Lead free solder used in the board (material : Sn-Cu, melting point : 230 Centigrade))

forward side

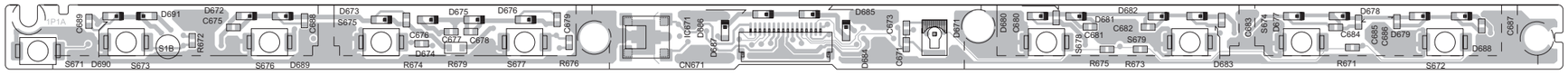

reverse side

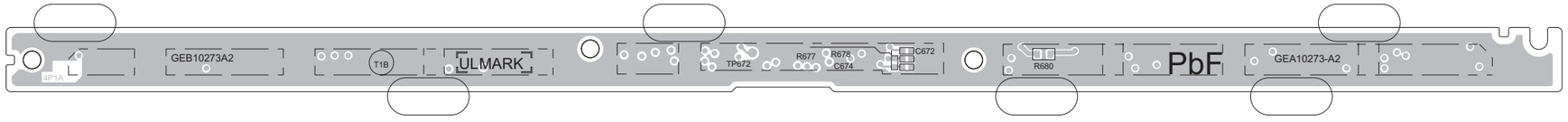

■ Sub board (Common use)

(Lead free solder used in the board (material : Sn-Ag-Cu, melting point : 219 Centigrade))
(Lead free solder used in the board (material : Sn-Cu, melting point : 230 Centigrade))

forward side

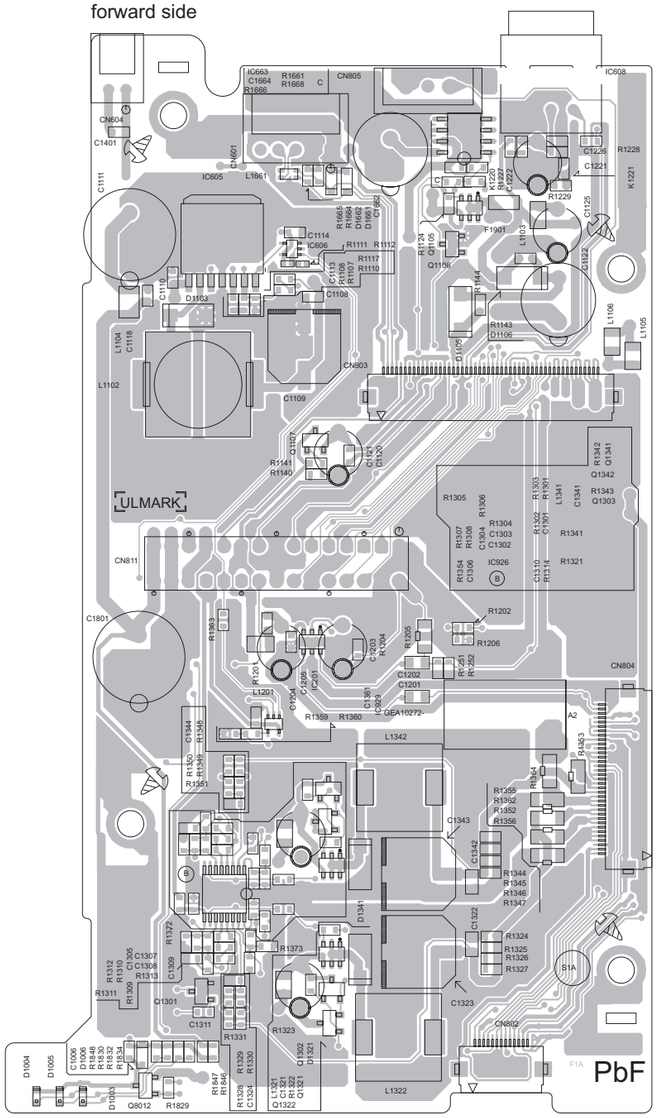

reverse side

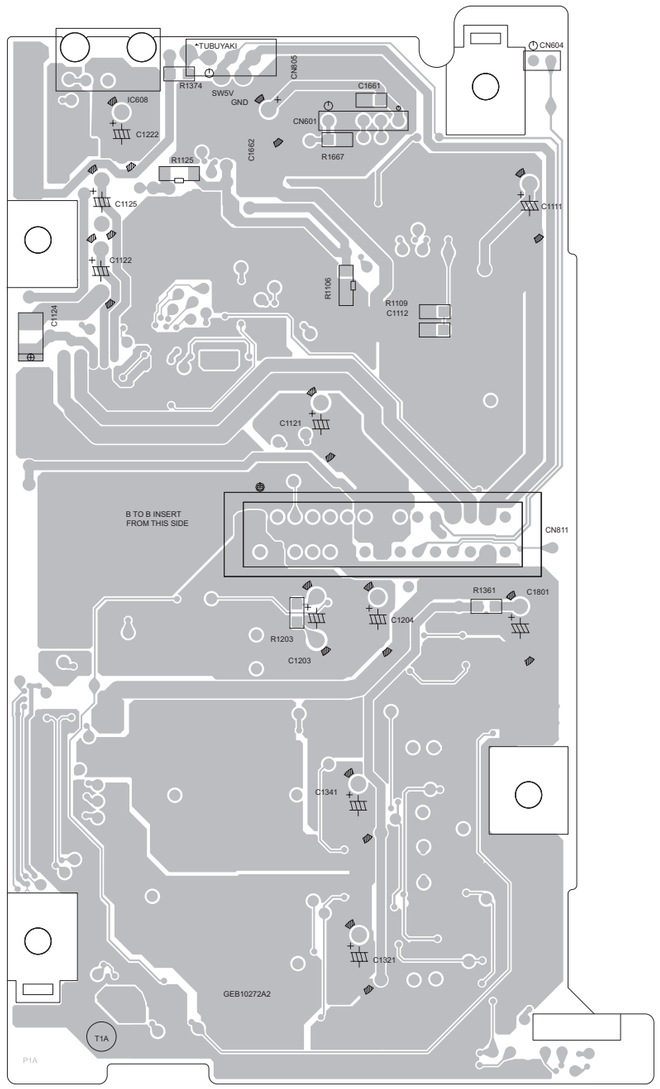

■ Door board (Common use)

(Lead free solder used in the board (material : Sn-Ag-Cu, melting point : 219 Centigrade))
(Lead free solder used in the board (material : Sn-Cu, melting point : 230 Centigrade))

forward side

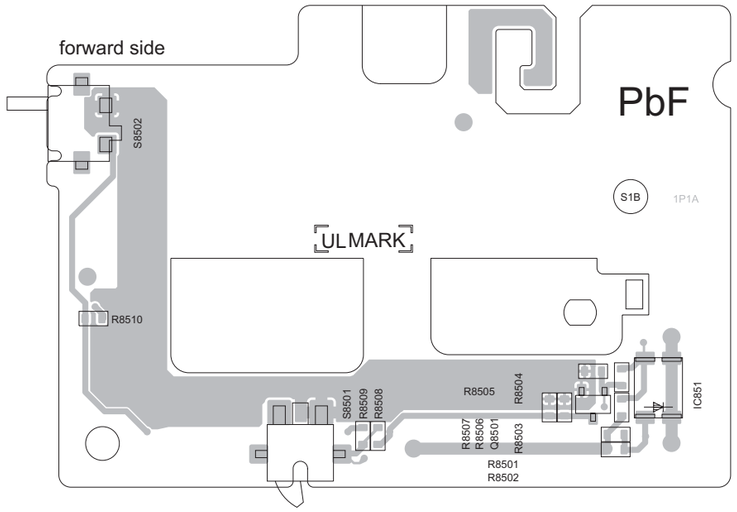

reverse side

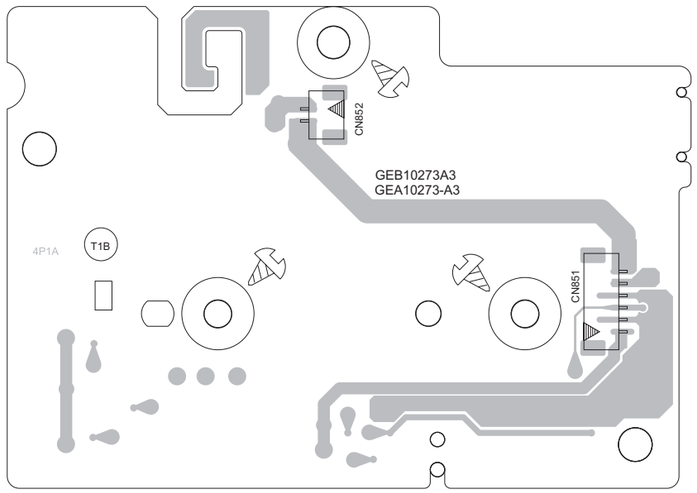

■ Panel board (Common use)

(Lead free solder used in the board (material : Sn-Ag-Cu, melting point : 219 Centigrade))
(Lead free solder used in the board (material : Sn-Cu, melting point : 230 Centigrade))

forward side

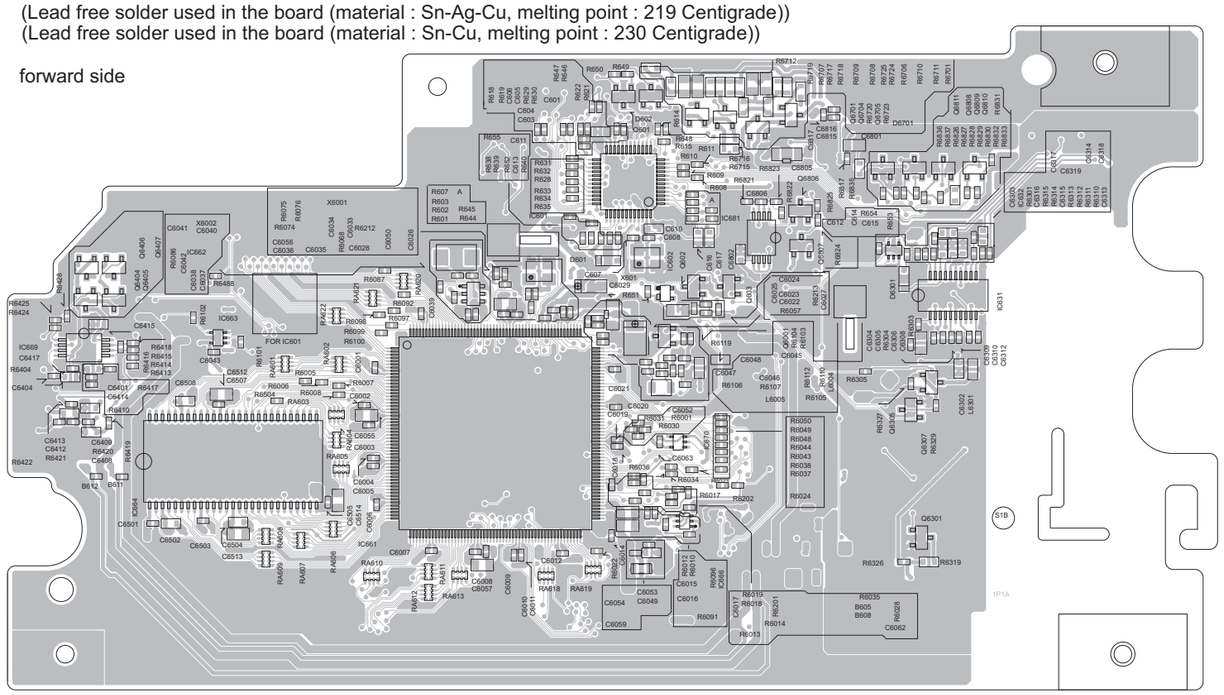

reverse side

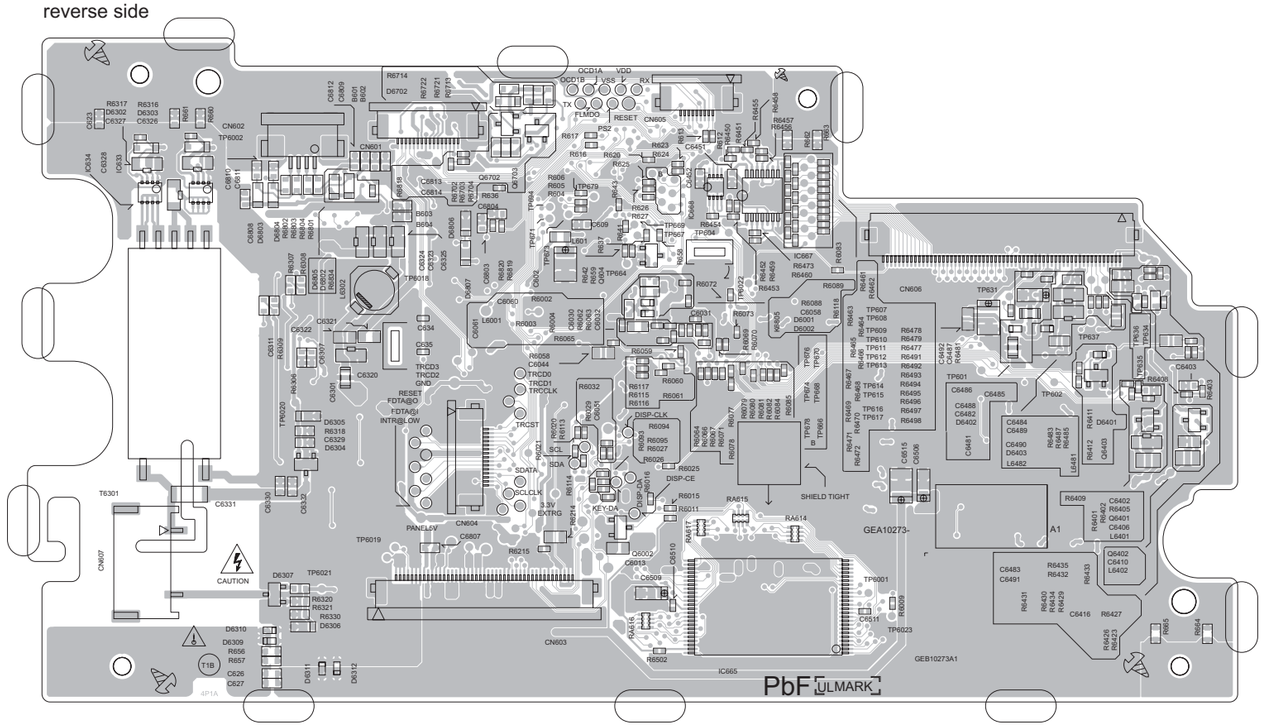

■ Photo board (For KW-AVX624, KW-AVX625, KW-AVX626)

(Lead free solder used in the board (material : Sn-Ag-Cu, melting point : 219 Centigrade))
(Lead free solder used in the board (material : Sn-Cu, melting point : 230 Centigrade))

forward side

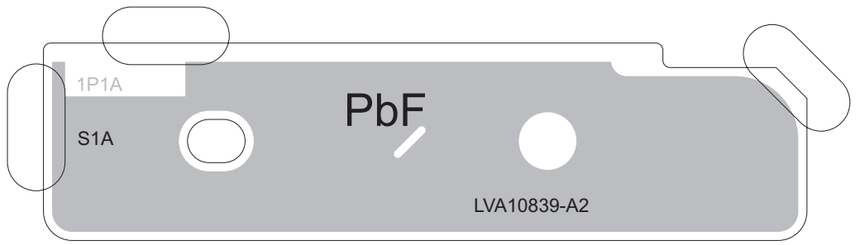

reverse side

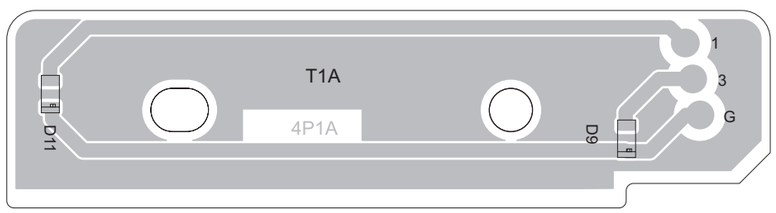

■ Photo board (For KW-ADV792, KW-AVX720, KW-AVX724, KW-AVX725, KW-AVX726, KW-AVX728)

(Lead free solder used in the board (material : Sn-Ag-Cu, melting point : 219 Centigrade))
(Lead free solder used in the board (material : Sn-Cu, melting point : 230 Centigrade))

forward side

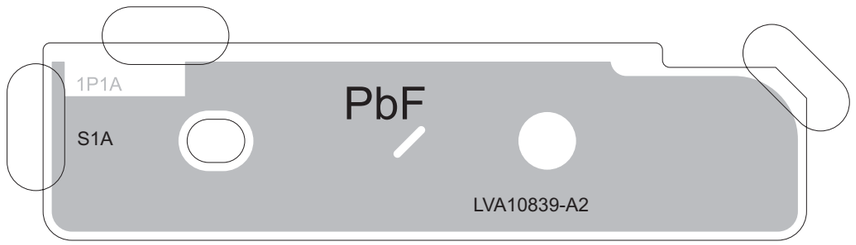

reverse side

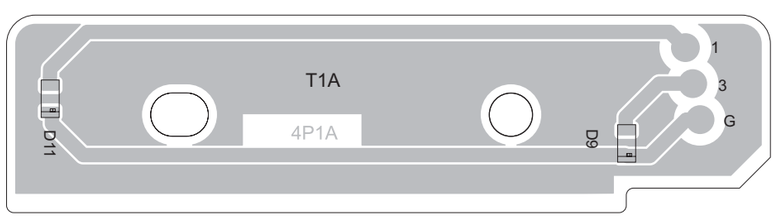

■ Front end board (For KW-AVX624, KW-AVX625, KW-AVX626)

(Lead free solder used in the board (material : Sn-Ag-Cu, melting point : 219 Centigrade))
(Lead free solder used in the board (material : Sn-Cu, melting point : 230 Centigrade))

forward side

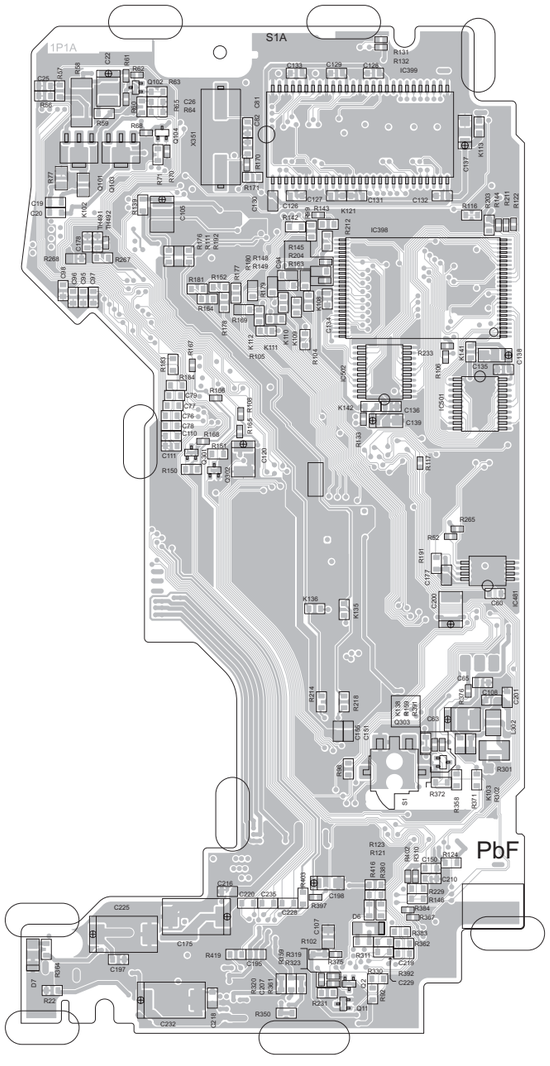

reverse side

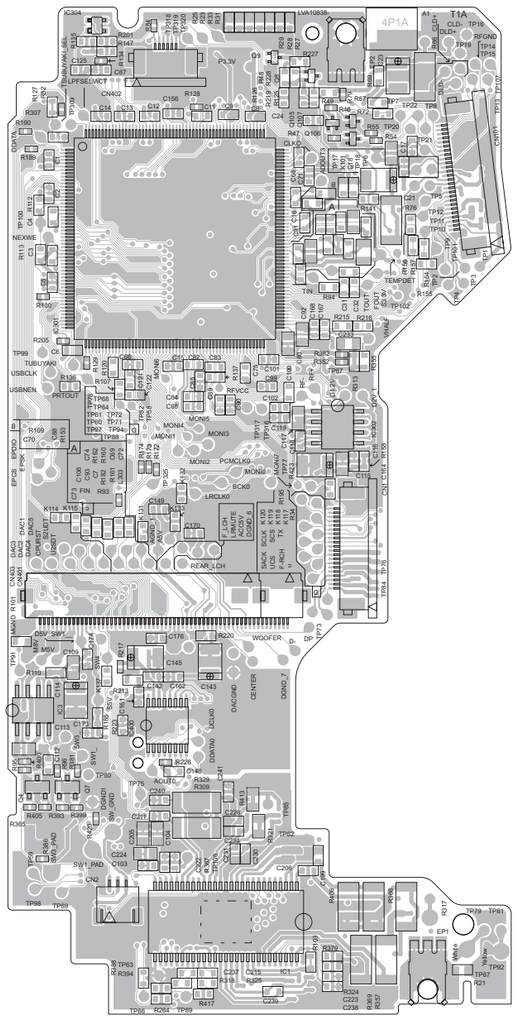

■ Front end board (For KW-ADV792, KW-AVX720, KW-AVX724, KW-AVX725, KW-AVX726, KW-AVX728)

(Lead free solder used in the board (material : Sn-Ag-Cu, melting point : 219 Centigrade))
(Lead free solder used in the board (material : Sn-Cu, melting point : 230 Centigrade))

forward side

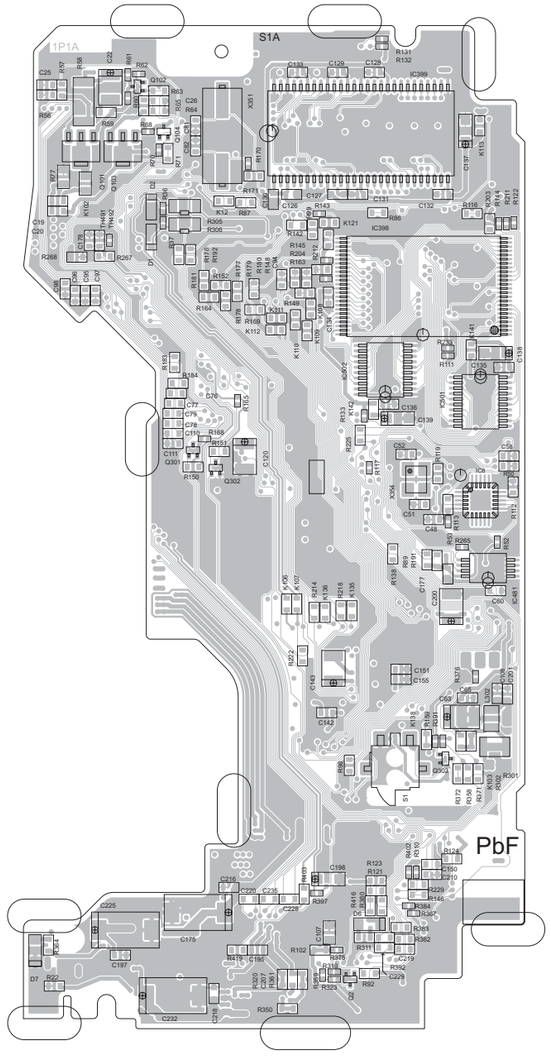

reverse side

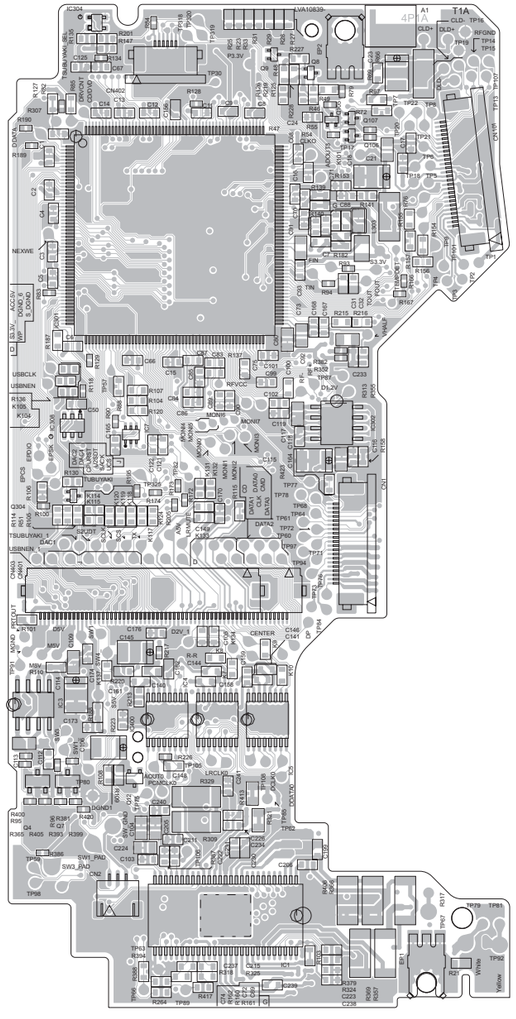

< MEMO >

Victor Company of Japan, Limited
Mobile Entertainment Division 10-1,1chome,Ohwatari-machi,Maebashi-city,Gumma-ken,371-8543,Japan

(No.MA443SCH<Rev.001>)

Printed in Japan
VSE